Reduced Voltage Motor Starters

Contents

Description — *Page*

Solid-State Controllers
- Type TL, Torque Limiter 39-2
- Type S701, Soft Start Controllers 39-4
- Type S511, Semiconductor Reversing Contactor 39-11

Solid-State Starters
- Type S752, Intelligent Technologies *(IT.)* Soft Starters 39-14
- Type S801, Intelligent Technologies *(IT.)* Soft Starters 39-22
- Type S811, Intelligent Technologies *(IT.)* Soft Starters with DIM 39-37
- Type MV811, Intelligent Technologies *(IT.)* Medium Voltage Soft Starters 39-60

***IT.* Solid-State Soft Starters — Enclosed**
- Product Family Overview 39-89
- Non-combination 39-93
- Combination with Fusible Disconnect 39-96
- Combination with Breaker 39-99

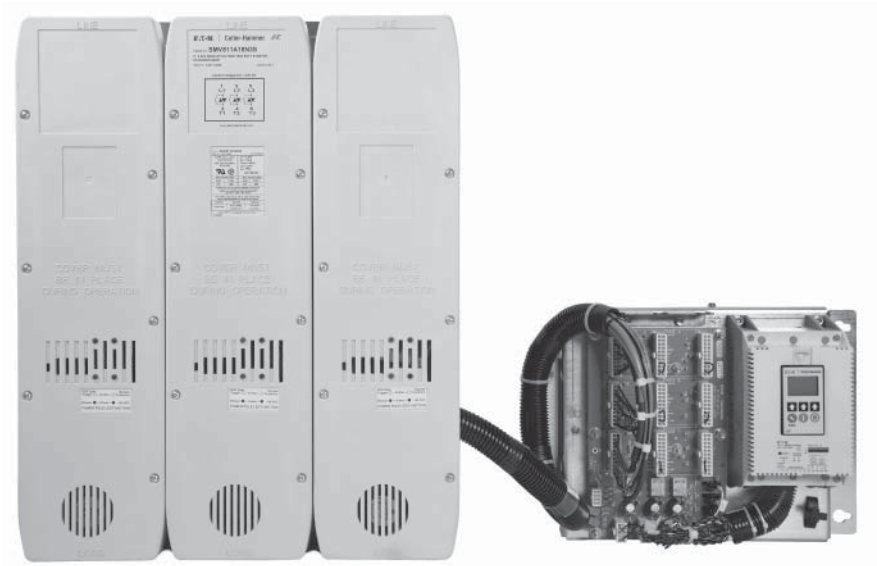

MV811

Contents

Description *Page*

Torque Limiters **39-2**
Soft Start Controllers. **39-4**
Soft Start Controllers with Auxiliary Contact **39-7**
Soft Start Controllers with Brake **39-9**
Semiconductor Reversing Contactor **39-11**
Cables, Mounting and Dimensions **39-12**

Torque Limiters

TL480N25

Product Description

The TL device line of Starting Torque Limiters is designed for the soft start of 3-phase or single-phase motors, i.e., it allows smoother starting of all AC induction motors, thus decreasing shock and vibration problems encountered during across-the-line starts. The device is ramp-up time/torque adjustable from .5 – 5 seconds/0 – 85% of nominal starting torque.

Application Description

The TL line of torque limiters is designed for single-phase and 3-phase motor applications. It provides a reduction in the peak inrush a motor experiences during start-up. The torque limiter controls current on one of the three motor phases to control the torque being applied to the motor, allowing for smooth starting of a motor. The torque limiter is designed to be used with a Manual Motor Starter or a full voltage starter. These devices provide the necessary overload protection for the motor and also provide line isolation for the motor. Short-circuit protection can be provided by fuses or circuit breakers.

Features

- Rated operational voltage up to 600V AC
- Adjustable ramp times (.5 – 5 seconds)
- Adjustable initial torque control (0 – 85%)
- Unlimited number of START/STOP operations per hour
- IP20 finger protection

Benefits

- Reduced wear on belts, gears, chains, clutches, shafts and bearings
- Compact design allows easy installation and smaller enclosures
- Less shock to product on conveyor lines and material handling gear

Standards and Certifications

- IEC 947 compliant
- EN 60947-4-2
- CE marked
- CSA Certified
- UL Listed

Product Selection

Table 39-1. Torque Limiter Controllers

Max. Current	Line Voltage	kW Rating (50 Hertz)				Horsepower Rating									Catalog Number	Price U.S. $
						110/120V	200V		230V		460V		575V			
		110/120V	230V	380 – 400V	440V		1.0 SF	1.15 SF	1.0 SF	1.15 SF	1.0 SF	1.15 SF	1.0 SF	1.15 SF		
3-Phase Motor																
15	208 – 480	N/A	4	5.5	7.5	N/A	3	3	3	3	10	7-1/2	N/A	N/A	**TL480N15**	
15	500 – 600	N/A	N/A	N/A	N/A	N/A	N/A	N/A	N/A	N/A	N/A	N/A	10	10	**TL600N15**	
25	208 – 480	N/A	7.5	12.5	12.5	N/A	5	5	7-1/2	5	15	15	N/A	N/A	**TL480N25**	
25	500 – 600	N/A	N/A	N/A	N/A	N/A	N/A	N/A	N/A	N/A	N/A	N/A	20	20	**TL600N25**	
1-Phase Motor																
15	208 – 240	N/A	2.2	N/A	N/A	N/A	2	2	3	3	N/A	N/A	N/A	N/A	**TL480N15**	
15	380 – 480	N/A	N/A	N/A	N/A	N/A	N/A	N/A	N/A	N/A	5	5	N/A	N/A	**TL480N15**	
25	208 – 240	N/A	4.0	7.5	N/A	N/A	3	3	5	5	N/A	N/A	N/A	N/A	**TL480N25**	
25	380 – 480	N/A	N/A	7.5	N/A	N/A	N/A	N/A	N/A	N/A	10	10	N/A	N/A	**TL480N25**	

Discount Symbol **1CD-1**

Technical Data — Specifications

Table 39-2. Torque Limiter

	TL480N15	TL600N15	TL480N25	TL600N25
Maximum Current Capacity	15	15	25	25
Trip Class — 10A — 10 — 20 — 30	15 15 12 10	15 15 12 10	25 25 20 15	25 25 20 15
Dimensions				
Width in Inches (mm)	1.77 (45)	1.77 (45)	1.77 (45)	1.77 (45)
Height in Inches (mm)	3.94 (100)	3.94 (100)	3.94 (100)	3.94 (100)
Depth in Inches (mm)	5.04 (128)	5.04 (128)	5.04 (128)	5.04 (128)
Weight in lbs. (kg)	1.52 (690)	1.52 (690)	1.52 (690)	1.52 (690)
Drawing	See **Figure 39-3** (**Page 39-13**)			
Electrical Characteristics				
Line Voltage (V AC)	208 – 480	500 – 600	208 – 480	500 – 600
Operating Frequency (Hz)	50/60	50/60	50/60	50/60
Leakage Current	5 mA AC max.			
Minimum Operational Current	50 mA			
Control Characteristics				
Ramp Time (secs)	.5 – 5	.5 – 5	.5 – 5	.5 – 5
Ramp Settings (% LRT)	85%	85%	85%	85%
Environment Characteristics				
Temperature — Operating (no derating)	-30° – 40°C	-30° – 40°C	-30° – 40°C	-30° – 40°C
Current Rating 50°C	12.5 Amps	12.5 Amps	20 Amps	20 Amps
Limited Duty Cycle 50°C	None		25A on-time max. 15 min. duty cycle max. .8	
Current Rating 60°C	10 Amps	10 Amps	17 Amps	17 Amps
Limited Duty Cycle 60°C	None		25A on-time max. 15 min. duty cycle max. .65	
Temperature — Storage	-30° – 80°C	-30° – 80°C	-30° – 80°C	-30° – 80°C
Altitude (Meters) — No Derating	2000	2000	2000	2000
Humidity	95% Non-condensing			
Operating Position	Vertical ± 30°			
Impulse Withstand Voltage IEC 947-4-1	4000V	4000V	4000V	4000V
Rated Insulation Voltage (Ui)	660V			
Installation Category	III			
Vibration	IEC 68-2-6 5g 10 – 150 Hz			
Power Dissipation for Intermittent Operation	1 W/A x Duty Cycle			
Power Dissipation for Continuous Operation	1 W/A			
Cooling Method	Natural Convection			
Degree of Protection	IP20	IP20	IP20	IP20
Pollution Degree	3	3	3	3
Agency Approvals	UL, CSA, CE		UL, CSA, CE	

Soft Start Controllers

S701E15N3S

Product Description

The S701 device is a Reduced Voltage Soft Start Controller designed to control acceleration and deceleration of 3-phase motors. The S701 provides the user with the ability to adjust initial torque, ramp up and down time and also select Kick Start for high inertial loads.

S701E25N3S

Application Description

The S701 line of soft start controllers is specifically designed to be a low cost option for soft starting small (15 hp and down) 3-phase motors. The S701 unit controls current on two of three motor phases to control the torque being applied to the motor, allowing for smooth starting of a motor. The S701 is designed to be used with a Manual Motor Starter or a full voltage starter. These devices provide the necessary overload protection for the motor and also provide line isolation for the motor. Short-circuit protection can be provided by fuses or circuit breakers.

Features

- Rated operational voltage up to 600V AC
- Control voltage range from 24 to 480V AC/DC
- Adjustable ramp times (.5 – 10 seconds)
- Adjustable initial torque control (0 – 85%)
- Kick Start feature
- Soft Stop (.5 – 10 seconds)
- Unlimited number of START/STOP operations per hour
- IP20 finger protection
- Fractional to 15 hp motors @ 480V (20 hp @ 600V)

Benefits

- Reduced wear on belts, gears, chains, clutches, shafts and bearings
- Allows for controlling the inrush current to the motor
- Reduced water-hammer in pumping applications
- Less shock to product on conveyor lines and material handling gear

Standards and Certifications

- IEC 947 compliant
- EN 60947-4-2
- CE marked
- CSA Certified
- UL Listed
- cUL Listed

Catalog Number Selection — S701

Table 39-4. S701 Catalog Numbering System

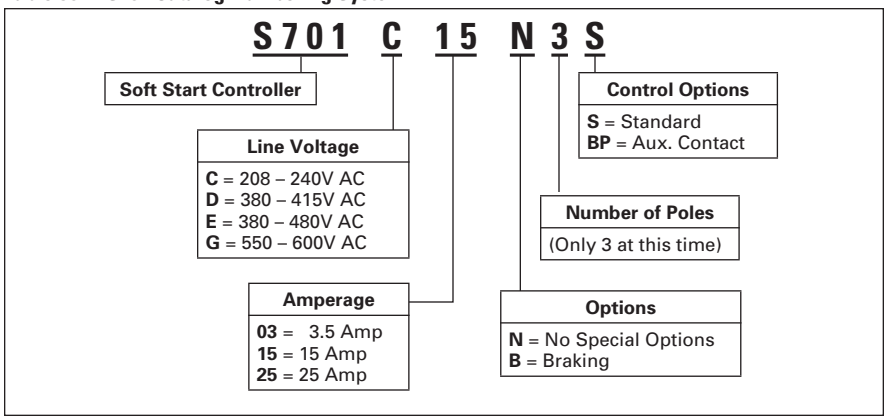

Product Selection

Table 39-3. Soft Start Controllers

Max. Current	Line Voltage	Control Voltage (V AC/V DC)	3-Phase Motor kW Rating (50 Hertz)			Horsepower Rating (60 Hertz) 200V		230V		460V		575V		Catalog Number	Price U.S. $
			230V	380 – 400V	440V	1.0 SF	1.15 SF	1.0 SF	1.15 SF	1.0 SF	1.15 SF	1.0 SF	1.15 SF		
3.5	208 – 240	24 – 240	7.5	N/A	N/A	1	1	1	1	N/A	N/A	N/A	N/A	**S701C03N3S**	
3.5	380 – 415	24 – 300	N/A	1.1	N/A	N/A	N/A	N/A	N/A	1-1/2	1-1/2	N/A	N/A	**S701D03N3S**	
3.5	440 – 480	24 – 300	N/A	N/A	1.5	N/A	N/A	N/A	N/A	2	2	N/A	N/A	**S701E03N3S**	
3.5	500 – 600	24 – 300	N/A	N/A	N/A	N/A	N/A	N/A	N/A	N/A	N/A	2	2	**S701G03N3S**	
15	208 – 240	24 – 240	4	N/A	N/A	3	3	3	3	N/A	N/A	N/A	N/A	**S701C15N3S**	
15	380 – 480	24 – 300	N/A	5.5	7.5	N/A	N/A	N/A	N/A	10	7-1/2	N/A	N/A	**S701E15N3S**	
15	500 – 600	24 – 300	N/A	N/A	N/A	N/A	N/A	N/A	N/A	N/A	N/A	10	10	**S701G15N3S**	
25	208 – 240	24 – 240	7.5	N/A	N/A	5	5	7-1/2	5	N/A	N/A	N/A	N/A	**S701C25N3S**	
25	380 – 480	24 – 300	N/A	11	12.5	N/A	N/A	N/A	N/A	15	15	N/A	N/A	**S701E25N3S**	
25	500 – 600	24 – 300	N/A	N/A	N/A	N/A	N/A	N/A	N/A	N/A	N/A	20	20	**S701G25N3S**	

Discount Symbol **1CD-1**

Technical Data — Specifications

Table 39-5. Soft Starter — S701XXXN3S

	S701C03N3S	S701D03N3S	S701E03N3S	S701G03N3S
Maximum Current Capacity	3.5	3.5	3.5	3.5
Trip Class — 10A — 10 — 20 — 30	3.5 3.5 2.8 2.1	3.5 3.5 2.8 2.1	3.5 3.5 2.8 2.1	3.5 3.5 2.8 2.1
Dimensions				
Width in Inches (mm)	.89 (22.5)	.89 (22.5)	.89 (22.5)	.89 (22.5)
Height in Inches (mm)	3.94 (100)	3.94 (100)	3.94 (100)	3.94 (100)
Depth in Inches (mm)	5.01 (127)	5.01 (127)	5.01 (127)	5.01 (127)
Weight in lbs. (kg)	.6 (270)	.6 (270)	.6 (270)	.6 (270)
Drawing	See **Figure 39-2** (**Page 39-13**)			
Electrical Characteristics				
Line Voltage (V AC)	208 – 240	380 – 415	440 – 480	500 – 600
Operating Frequency (Hz)	50/60	50/60	50/60	50/60
Leakage Current	5 mA AC Max.			
Minimum Operational Current	50 mA			
Control Voltage (V AC/V DC)	24 – 240	24 – 300	24 – 300	24 – 300
Pick-Up Voltage Max.	20.4V AC/DC			
Drop out Voltage Min.	5V AC/DC			
Max. Control Current for No Operation	1 mA	1 mA	1 mA	1 mA
Response Time Max.	70 mS	70 mS	70 mS	70 mS
Control Characteristics				
Ramp Time (Secs)	.5 – 10	.5 – 10	.5 – 10	.5 – 10
Ramp Settings (% LRT)	85%	85%	85%	85%
Kick Start Settings (% LRT)	85%	85%	85%	85%
Soft Stop (secs)	.5 – 10	.5 – 10	.5 – 10	.5 – 10
Environment Characteristics				
Temperature – Operating (no derating)	-30° – 40°C	-30° – 40°C	-30° – 40°C	-30° – 40°C
Current Rating 50°C	NA	NA	NA	NA
Limited Duty Cycle 50°C	NA			
Current Rating 60°C	NA	NA	NA	NA
Limited Duty Cycle 60°C	NA			
Temperature – Storage	-30° – 80°C	-30° – 80°C	-30° – 80°C	-30° – 80°C
Altitude (Meters) – No Derating	2000	2000	2000	2000
Humidity	95% Non-condensing			
Operating Position (no derating)	Vertical ± 30°			
Impulse Withstand Voltage IEC 947-4-1	4000V	4000V	4000V	4000V
Rated Insulation Voltage (Ui)	660V			
Installation Category	III			
Vibration	IEC 68-2-6 5g 10 – 150 Hz			
Power Dissipation for Intermittent Operation	4 W/A x Duty Cycle			
Power Dissipation for Continuous Operation	4 W/A x Duty Cycle			
Cooling Method	Natural Convection			
Degree of Protection	IP20	IP20	IP20	IP20
Pollution Degree	3	3	3	3
Agency Approvals	UL, cUL, CE			

Table 39-5. Soft Starter — S701XXXN3S (Continued)

	S701C15N3S	S701E15N3S	S701G15N3S	S701C25N3S	S701E25N3S	S701G25N3S
Maximum Current Capacity	15	15	15	25	25	25
Trip Class — 10A — 10 — 20 — 30	15 15 12 10	15 15 12 10	15 15 12 10	25 25 20 15	25 25 20 15	25 25 20 15
Dimensions						
Width in Inches (mm)	1.77 (45)	1.77 (45)	1.77 (45)	3.54 (90)	3.54 (90)	3.54 (90)
Height in Inches (mm)	3.94 (100)	3.94 (100)	3.94 (100)	3.94 (100)	3.94 (100)	3.94 (100)
Depth in Inches (mm)	5.04 (128)	5.04 (128)	5.04 (128)	5.04 (128)	5.04 (128)	5.04 (128)
Weight in lbs. (kg)	1.52 (690)	1.52 (690)	1.52 (690)	2.53 (1150)	2.53 (1150)	2.53 (1150)
Drawing	See **Figure 39-3** (**Page 39-13**)			See **Figure 39-4** (**Page 39-13**)		
Electrical Characteristics						
Line Voltage (V AC)	208 – 240	380 – 480	500 – 600	208 – 240	380 – 480	500 – 600
Operating Frequency (Hz)	50/60	50/60	50/60	50/60	50/60	50/60
Leakage Current	5 mA AC max.			5 mA AC max.		
Minimum Operational Current	50 mA			50 mA		
Control Voltage (V AC/V DC)	24 – 240	24 – 480	24 – 480	24 – 240	24 – 300	24 – 300
Pick-Up Voltage Max.	20.4V AC/DC			20.4 V AC/DC		
Drop Out Voltage Min.	5V AC/DC			5V AC/DC		
Max. Control Current for No Operation	1 mA	1 mA	1 mA	1 mA	1 mA	1 mA
Response Time Max.	70 mS	70 mS	70 mS	70 mS	70 mS	70 mS
Control Characteristics						
Ramp Time (secs)	.5 – 10	.5 – 10	.5 – 10	.5 – 10	.5 – 10	.5 – 10
Ramp Settings (% LRT)	85%	85%	85%	85%	85%	85%
Kick Start Settings (% LRT)	85%	85%	85%	85%	85%	85%
Soft Stop (secs)	.5 – 10	.5 – 10	.5 – 10	.5 – 10	.5 – 10	.5 – 10
Environment Characteristics						
Temperature — Operating (no derating)	-30° – 40°C	-30° – 40°C	-30° – 40°C	-30° – 40°C	-30° – 40°C	-30° – 40°C
Current Rating 50°C	12.5 Amps	12.5 Amps	12.5 Amps	20 Amps	20 Amps	20 Amps
Limited Duty Cycle 50°C	15A on-time max. 15 min. duty cycle max. .8			25A on-time max. 15 min. duty cycle max. .8		
Current Rating 60°C	10 Amps	10 Amps	10 Amps	17 Amps	17 Amps	17 Amps
Limited Duty Cycle 60°C	15A on-time max. 15 min. duty cycle max. .65			25A on-time max. 15 min. duty cycle max. .65		
Temperature — Storage	-30° – 80°C	-30° – 80°C	-30° – 80°C	-30° – 80°C	-30° – 80°C	-30° – 80°C
Altitude (Meters) — No Derating	2000	2000	2000	2000	2000	2000
Humidity	95% Non-condensing					
Operating Position (no derating)	Vertical ± 30°					
Impulse Withstand Voltage IEC 947-4-1	4000V	4000V	4000V	4000V	4000V	4000V
Rated Insulation Voltage (Ui)	660V			660V		
Installation Category	III			III		
Vibration	IEC 68-2-6 5g 10 – 150 Hz			IEC 68-2-6 5g 10 – 150 Hz		
Power Dissipation for Intermittent Operation	2 W/A x Duty Cycle			2 W/A x Duty Cycle		
Power Dissipation for Continuous Operation	2 W/A			2 W/A		
Cooling Method	Natural Convection					
Degree of Protection	IP20	IP20	IP20	IP20	IP20	IP20
Pollution Degree	3	3	3	3	3	3
Agency Approvals	UL, CSA, CE					

Soft Start Controllers with Auxiliary Contact

Product Description

The S701 device is a Reduced Voltage Soft Start Controller designed to control acceleration and deceleration of 3-phase motors. With the Auxiliary Contact, it is possible to control an external bypass to reduce heating and increase acceleration and deceleration times.

The unit provides the user with the ability to adjust initial torque, ramp up and down time and also select Kick Start for high inertia loads.

Application Description

The S701 line of soft start controllers is specifically designed to be a low cost option for soft starting small (15 hp and down) 3-phase motors. The Auxiliary Contact is designed to work in conjunction with an across-the-line contactor. The purpose of the contactor is to provide a parallel current path once the soft starter has brought the motor up to speed. Once the soft start controller reaches end of ramp, the auxiliary contact will close and send a signal to close the bypass contactor, thus providing a low impedance path for the current to the motor. The S701 unit controls current on two of three motor phases to control the torque being applied to the motor, allowing for smooth starting of a motor. The S701 is designed to be used with a Manual Motor Protector or a full voltage starter. These devices provide the necessary overload protection for the motor and also provide line isolation for the motor. Short-circuit protection can be provided by fuses or circuit breakers.

Features

- Rated operational voltage up to 600V AC
- Control voltage range from 24 to 300V AC/DC
- Adjustable ramp times (.5 – 20 seconds)
- Adjustable initial torque control (0 – 85%)
- Kick Start feature (0 – 85% adjustment)
- Kick Start for 200 mS
- Soft Stop (.5 – 20 seconds)
- IP20 finger protection
- Available up to 30 Amps (with Bypass installed)
- Auxiliary contact for up-to-speed indication

Benefits

- Reduced wear on belts, gears, chains, clutches, shafts and bearings
- Bypass option allows for greater current capacity in the unit
- Bypass option helps to reduce heat in the enclosure
- Allows for controlling the inrush current to the motor
- Reduced water-hammer in pumping applications
- Less shock to product on conveyor lines and material handling gear

Standards and Certifications

- IEC 947 compliant
- EN 60947-4-2
- CE marked
- cUL Listed
- UL Listed

Product Selection

Table 39-6. Soft Start Controller with Auxiliary Contact

Max. Current	Line Voltage	Control Voltage (V AC/V DC)	3-Phase Motor											Catalog Number	Price U.S. $
			kW Rating (50 Hertz)			Horsepower Rating									
						200V		230V		460V		575V			
			230V	380 – 400V	440V	1.0 SF	1.15 SF	1.0 SF	1.15 SF	1.0 SF	1.15 SF	1.0 SF	1.15 SF		
Ratings without Bypass															
25	208 – 240	24 – 240	5.5	N/A	N/A	5	5	7-1/2	5	N/A	N/A	N/A	N/A	**S701C25N3BP**	
25	380 – 480	24 – 300	N/A	12.5	12.5	N/A	N/A	N/A	N/A	15	15	N/A	N/A	**S701E25N3BP**	
25	500 – 600	24 – 300	N/A	N/A	N/A	N/A	N/A	N/A	N/A	N/A	N/A	20	20	**S701G25N3BP**	
Ratings with Bypass															
30	208 – 240	24 – 240	7.5	N/A	N/A	7-1/2	7-1/2	10	7-1/2	N/A	N/A	N/A	N/A	**S701C25N3BP**	
30	380 – 480	24 – 300	N/A	15	15	N/A	N/A	N/A	N/A	20	15	N/A	N/A	**S701E25N3BP**	
30	500 – 600	24 – 300	N/A	N/A	N/A	N/A	N/A	N/A	N/A	N/A	N/A	25	20	**S701G25N3BP**	

Note: For S701 Catalog Number Selection, see **Table 39-4**, **Page 39-4**.

Discount Symbol **1CD-1**

Technical Data — Specifications

Table 39-7. Soft Starter — S701XXXN3BP

	S701C25N3BP	S701E25N3BP	S701G25N3BP
Maximum Current Capacity with Bypass (without Bypass)	30 (25)	30 (25)	30 (25)
Trip Class — 10A — 10 — 20 — 30	30 (25) 30 (25) 24 (20) 19.5 (15)	30 (25) 30 (25) 24 (20) 19.5 (15)	30 (25) 30 (25) 24 (20) 19.5 (15)
Dimensions			
Width in Inches (mm)	3.54 (90)	3.54 (90)	3.54 (90)
Height in Inches (mm)	3.94 (100)	3.94 (100)	3.94 (100)
Depth in Inches (mm)	5.04 (128)	5.04 (128)	5.04 (128)
Weight in lbs. (kg)	2.53 (1150)	2.53 (1150)	2.53 (1150)
Drawing	See **Figure 39-4** (**Page 39-13**)		
Electrical Characteristics			
Line Voltage (V AC)	208 – 240	380 – 480	500 – 600
Operating Frequency (Hz)	50/60	50/60	50/60
Leakage Current	5 mA AC max.		
Minimum Operational Current	50 mA		
Control Voltage (V AC/V DC)	24 – 240	24 – 300	24 – 300
Pick-Up Voltage Max.	20.4 V AC/DC		
Drop Out Voltage Min.	5V AC/DC		
Max. Control Current for No Operation	1 mA	1 mA	1 mA
Response Time Max.	70 mS	70 mS	70 mS
Control Characteristics			
Ramp Time (secs)	.5 – 20	.5 – 20	.5 – 20
Ramp Settings (% LRT)	85%	85%	85%
Kick Start Settings (% LRT)	85%	85%	85%
Soft Stop (secs)	.5 – 20	.5 – 20	.5 – 20
Environmental Characteristics			
Temperature — Operating (no derating)	-30° – 40°C	-30° – 40°C	-30° – 40°C
Current Rating 50°C	20 Amps	20 Amps	20 Amps
Limited Duty Cycle 50°C	25A on-time max. 15 min. duty cycle max. .8		
Current Rating 60°C	17 Amps	17 Amps	17 Amps
Limited Duty Cycle 60°C	25A on-time max. 15 min. duty cycle max. .65		
Temperature — Storage	-30° – 80°C	-30° – 80°C	-30° – 80°C
Altitude (Meters) — No Derating	2000	2000	2000
Humidity	95% Non-condensing		
Operating Position (no derating)	Vertical ± 30°		
Impulse Withstand Voltage IEC 947-4-1	4000V	4000V	4000V
Rated Insulation Voltage (Ui)	660V	660V	660V
Installation Category	III	III	III
Vibration	IEC 68-2-6 5g 10 – 150 Hz		
Power Dissipation for Continuous Operation	2 W/A without Bypass		
Power Dissipation with Semiconductor Bypassed	5 W/A max. with Bypass		
Cooling Method	Natural Convection		
Degree of Protection	IP20	IP20	IP20
Pollution Degree	3	3	3
Agency Approvals	UL, cUL, CE		

Soft Start Controllers with Brake

S701E25B3S

Product Description

The S701 Soft Start Controller with DC Injection Brake is designed to control acceleration and deceleration of 3-phase motors. Brake current is adjustable from 0 – 50A DC. The ramp-up feature is adjustable from .5 – 10 seconds. Torque adjustment is adjustable with or without break loose (Kick Start) function.

Application Description

The S701 line of soft start controllers is specifically designed to be a low cost option for soft starting small (15 hp and down) 3-phase motors. The braking option is a DC injection system, allowing for fast stopping of a 3-phase motor. The S701 unit controls current on two of the three phases to control the torque being applied to the motor, allowing for smooth starting of a motor. The S701 is designed to be used with a Manual Motor Starter or a full voltage starter. These devices provide the necessary overload protection for the motor and also provide line isolation for the motor. Short-circuit protection can be provided by fuses or circuit breakers.

Features

- Rated operational voltage up to 480V AC
- Control voltage range from 24 to 300V AC/DC
- Adjustable ramp times (.5 – 20 seconds)
- Adjustable initial torque control (0 – 85%)
- Kick Start feature (0 – 85% adjustment)
- Kick Start for 200 mS
- IP20 finger protection
- Braking control adjustable from 0 – 50A DC
- Slow speed: 7.5% or 10% of nominal speed

Benefits

- Reduced wear on bolts, gears, chains, clutches, shafts and bearings
- Braking option allows for quick stopping of loads
- Brake control can help eliminate expensive mechanical brakes
- Allows for controlling the inrush current to the motor
- Reduced water-hammer in pumping applications
- Less shock to product on conveyor lines and material handling gear

Standards and Certifications

- IEC 947 compliant
- EN 60947-4-2
- CE marked
- cUL Listed
- UL Listed

Product Selection

Table 39-8. Soft Start Controller with Brake

Max. Current	Line Voltage	Control Voltage (V AC/V DC)	3-Phase Motor									Catalog Number	Price U.S. $
			kW Rating (50 Hertz)			Horsepower Rating							
						200V		230V		460V			
			230V	380 – 400V	440V	1.0 SF	1.15 SF	1.0 SF	1.15 SF	1.0 SF	1.15 SF		
25	208 – 240	24 – 240	5.5	N/A	N/A	5	5	7-1/2	5	N/A	N/A	**S701C25B3S**	
25	380 – 480	24 – 300	N/A	12.5	12.5	N/A	N/A	N/A	N/A	15	15	**S701E25B3S**	

Note: For S701 Catalog Number Selection, see **Table 39-4**, **Page 39-4**.

Discount Symbol **1CD-1**

Technical Data — Specifications

Table 39-9. Soft Start Controller with Brake — S701XXXB3S

	S701C25B3S	S701E25B3S
Maximum Current Capacity	25	25
Trip Class — 10A — 10 — 20 — 30	25 25 20 15	25 25 20 15
Dimensions		
Width in Inches (mm)	3.54 (90)	3.54 (90)
Height in Inches (mm)	3.94 (100)	3.94 (100)
Depth in Inches (mm)	5.04 (128)	5.04 (128)
Weight in lbs. (kg)	2.53 (1150)	2.53 (1150)
Drawing	See **Figure 39-4** (**Page 39-13**)	
Electrical Characteristics		
Line Voltage (V AC)	208 – 240	380 – 480
Operating Frequency (Hz)	50/60	50/60
Leakage Current	5 mA AC max.	
Minimum Operational Current	1 Amp	
Control Voltage (V AC/V DC)	24 – 240	24 – 300
Pick-Up Voltage Max.	20.4V AC/DC	
Drop Out Voltage Min.	5V AC/DC	
Max. Control Current for No Operation	1 mA	1 mA
Response Time Max.	100 mS	100 mS
Control Characteristics		
Ramp Time (secs)	.5 – 10	.5 – 10
Ramp Settings (% LRT)	85%	85%
Kick Start Settings (% LRT)	85%	85%
Soft Stop (secs)	.5 – 10	.5 – 10
Brake Current	0 – 50V DC	

	S701C25B3S	S701E25B3S
Environment Characteristics		
Temperature — Operating	-30° – 40°C	-30° – 40°C
Current Rating 50°C	20 Amps	20 Amps
Limited Duty Cycle 50°C	25A on-time max. 15 min. duty cycle max. .8	
Current Rating 60°C	17 Amps	17 Amps
Limited Duty Cycle 60°C	25A on-time max. 15 min. duty cycle max. .65	
Temperature — Storage	-30° – 80°C	-30° – 80°C
Altitude (Meters) — No Derating	2000	2000
Humidity	95% Non-condensing	
Operating Position	Vertical ± 30°	
Impulse Withstand Voltage IEC 947-4-1	4000V	4000V
Rated Insulation Voltage (Ui)	660V	660V
Installation Category	III	III
Vibration	IEC 68-2-6 5g 10 – 150 Hz	
Power Dissipation for Intermittent Operation	2 W/A x Duty Cycle	
Power Dissipation for Continuous Operation	2 W/A	
Cooling Method	Natural Convection	
Degree of Protection	IP20	IP20
Pollution Degree	3	3
Agency Approvals	UL, cUL, CE	

Semiconductor Reversing Contactor

Product Description

The S511 device is a Semiconductor Reversing Contactor designed to switch 3-phase motors forward and reverse. Unicore electronics and thermal design ensures high switching capacity and long lifetime.

Application Description

The S511 line of solid-state reversing contactors is specifically designed for high speed operations or when long contactor life is required. The reversing contactors are intended for small motor applications (5 hp and below). The S511 unit can be used in a variety of applications including fans, pumps, conveyors, doors, hoists, cranes, etc. It is designed to be used with a Manual Motor Starter or a full voltage starter. These devices provide the necessary overload protection for the motor and also provide line isolation for the motor. Short-circuit protection can be provided by fuses or circuit breakers.

Features

- Rated operational voltage up to 480V AC
- Control voltage ranges of 5 – 24V DC and 24 – 240V AC/DC
- Unlimited number of START/STOP operations per hour
- IP20 finger protection
- AC-3 Current Rating of 10A
- AC-4 Current Rating of 8A

Benefits

- Extremely high switching rates possible
- Very long life expectancy and no contacts or movable parts to replace
- Compact design (45 mm wide) leads to significant panel savings

Standards and Certifications

- IEC 947 compliant
- EN 60947-4-2
- CE marked
- CSA Certified
- UL Listed

Technical Data — Specifications

Table 39-11. Semiconductor Reversing Contactor— 511E10N3X

	S511E10N3D	S511E10N3S
Maximum Current Capacity	10	10
Trip Class — 10A	10	10
— 10	10	10
— 20	8	8
— 30	6.5	6.5
Dimensions		
Width in Inches (mm)	1.77 (45)	1.77 (45)
Height in Inches (mm)	3.94 (100)	3.94 (100)
Depth in Inches (mm)	5.04 (128)	5.04 (128)
Weight in lbs. (kg)	1.52 (690)	1.52 (690)
Drawing	See **Figure 39-3** (**Page 39-13**)	
Electrical Characteristics		
Line Voltage (V AC)	208 – 480	208 – 480
Operating Frequency (Hz)	50/60	50/60
Control Voltage	5 – 24V DC	24 – 240V AC/DC
Pick-Up Voltage Max.	4.25V DC	20.4V AC/DC
Drop Out Voltage Min.	1.5V DC	7.2V AC/DC
Max. Control Voltage	26.4V DC	253V AC/DC
Response Time Max.	1/2 cycle	1 cycle
Interlock Time Max.	80 mS	150 mS
Control Characteristics		
Operation Current AC-3	10	10
Operation Current AC-4	8	8
Duty Cycle	Continuous operation	
Leakage Current	1 mA AC max.	
Minimum Operation Current	10 mA AC	
Environmental Characteristics		
Temperature — Operating	0° – 60°C	0° – 60°C
Temperature — Storage	-20° – 80°C	-20° – 80°C
Altitude (Meters)	2000	2000
Humidity	95% Non-condensing	
Operating Position	Vertical ± 30°	
Impulse Withstand Voltage IEC 947-4-1	4000V	4000V
Rated Insulation Voltage (Ui)	660V	660V
Installation Category	III	III
Vibration	IEC 68-2-6 5g 10 – 150 Hz	
Power Dissipation for Intermittent Operation	2.2 W/A x Duty Cycle	
Power Dissipation for Continuous Operation	2.2 W/A	
Cooling Method	Natural Convection	
Degree of Protection	IP20	IP20
Pollution Degree	3	3
Agency Approvals	UL, CSA, CE	

Product Selection

Table 39-10. Reversing Solid-State Contactor

Max. Current	Line Voltage	Control Voltage	3-Phase Motor									Catalog Number	Price U.S. $
			kW Rating (50 Hertz)			Horsepower Rating							
						200V		230V		460V			
			230V	380 – 400V	440V	1.0 SF	1.15 SF	1.0 SF	1.15 SF	1.0 SF	1.15 SF		
10	208 – 480	5 – 24V DC	2.2	4	4	2	2	3	2	5	5	**S511E10N3D**	
10	208 – 480	24 – 240V AC/DC	2.2	4	4	2	2	3	2	5	5	**S511E10N3S**	

Discount Symbol **1CD-1**

Cables, Mounting and Dimensions

Table 39-12. Cable Requirements and Sizing

75°C	AWG (mm^2)	AWG (mm^2)
	18 – 12 (.75 – 4)	20 – 16 (.5 – 1.5)
	2 – 18 (2 x 1)	2 x 20 – 18 (2 x .5 – .75)
	18 – 10 (.75 – 4)	20 – 16 (.5 – 1.5)
	2 x 18 – 14 (2 x .75 – 2.5)	2 x 20 – 16 (2 x .5 – 1.5)
	18 – 10 (.75 – 4)	20 – 16 (.5 – 1.5)
	2 x 18 – 16 (.75 – 6)	2 x 20 – 16 (2 x .5 – 1.5)
	Posidrive 1 4.4 in-lb. max. (.5 Nm max.)	N/A
	4 mm 4.4 in-lb max. (.5 Nm max.)	3 mm 3.5 in-lb max. (.4 Nm max.)

Mounting Instructions

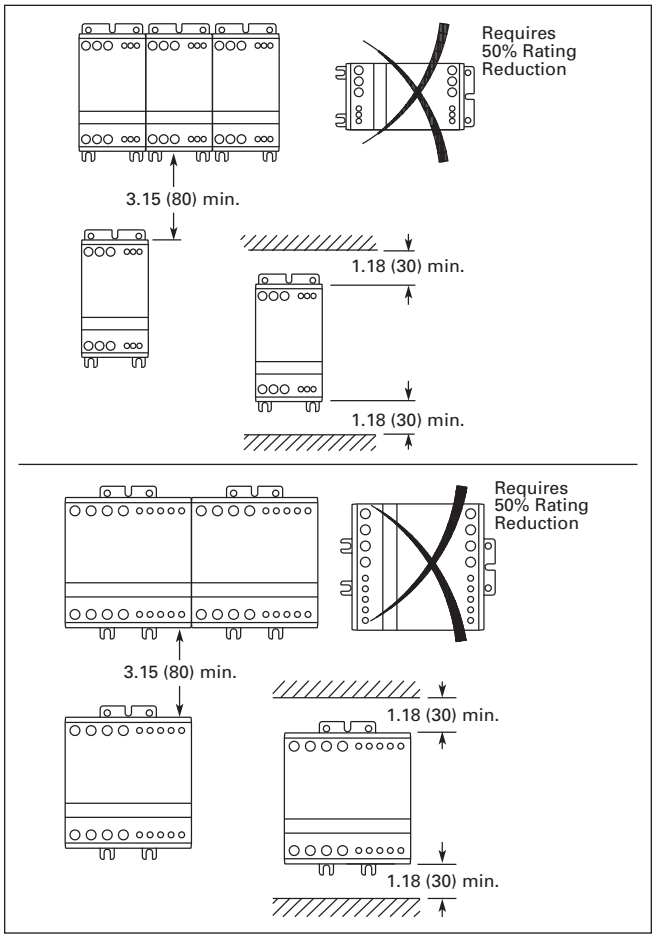

Figure 39-1. Recommended Mounting Distance in Inches (mm)

IMPORTANT: The controller is designed for vertical mounting in free air. If the controller is mounted horizontally, the load current must be reduced to 50% of rated current.

Dimensions

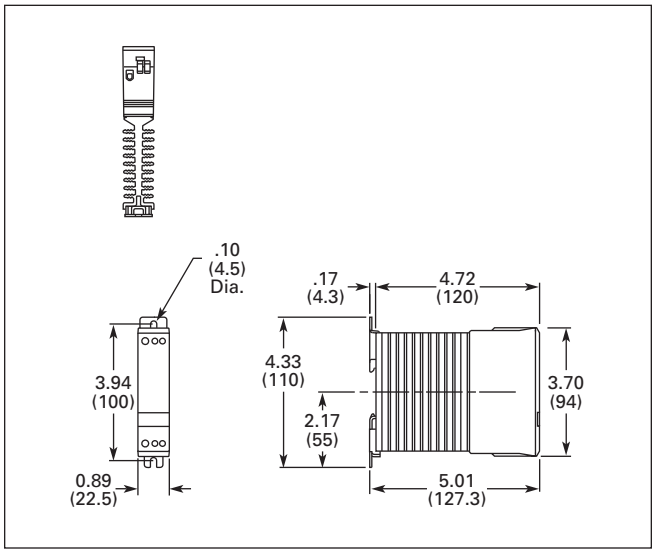

Figure 39-2. 22.5 mm Frame — Approximate Dimensions in Inches (mm)

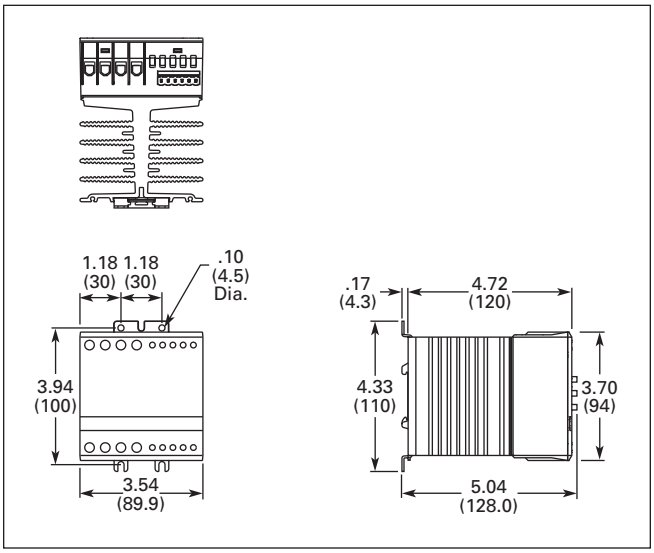

Figure 39-4. 90 mm Frame — Approximate Dimensions in Inches (mm)

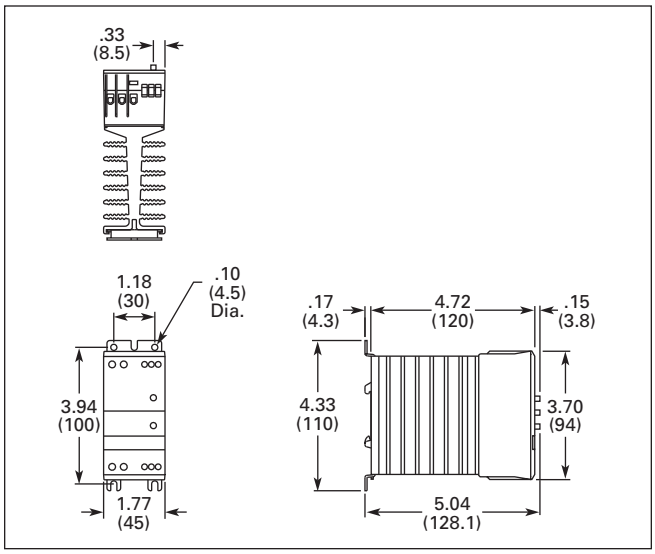

Figure 39-3. 45 mm Frame — Approximate Dimensions in Inches (mm)

Contents

Description *Page*

Type S752, Intelligent Technologies *(IT.)* Soft Starters

Product Description **39-14**
Application Description **39-14**
Features and Benefits **39-14**
Operation **39-16**
Catalog Number Selection **39-16**
Product Selection **39-17**
Accessories **39-19**
Renewal Parts **39-19**
Standards and Certifications **39-19**
Instructional Leaflets **39-19**
Technical Data and Specifications **39-20**
Dimensions **39-21**

S752

Product Description

Eaton's Cutler-Hammer® Intelligent Technologies (*IT.*) S752 Line of Reduced Voltage Soft Starters is very compact, multi-functional, easy to install and easy to program. Designed to control the acceleration and deceleration of three-phase motors, the device is available in configurations to be applied either in the line of the motor, or in the delta windings of the motor. The in-line device is available for current ranges from 0.25 to 50 amps. The inside-the-delta device is available for current ranges from 0.44 to 78 amps.

The S752 is a redesign of the popular S751 soft starter. Design enhancements include an increased current rating, short circuit coordination ratings with breakers and fuses, and inside-the-delta control. The S752 has replaced the S751 in the Cutler-Hammer product offering.

The S752 is designed to be a complete package combining the SCRs, bypass contactor and overload in one, very compact device. The S752 is available as a component for panel mounting, in Motor Control Centers or in Enclosed Control (NEMA Type 1, 3R, 4, 4X, 7/9 and 12).

Application Description

The S752 combines the soft starter overload, bypass contactor into one device for fast and easy installation. With its small size, it can easily fit in place of existing soft starters, wye-delta starters or across-the-line NEMA and IEC starters. This feature allows easy upgrades to existing systems.

The in-line version is designed for use with three-phase motors in a delta (three-lead) configuration. The product is designed to be wired in the three-phase line feeding the three motor input leads as is done for normal across-the-line starting.

The inside-the-delta version is to be used on 6-lead or 12-lead wye-delta motors. The device is wired into the windings of the motor. A reduced voltage start is achieved without the need to reconnect the motor in wye and delta configurations. The S752 offers enhanced performance over traditional wye-delta electromechanical starters.

The starter uses Silicon Controlled Rectifiers (SCRs) to ramp the voltage to the motor, providing smooth acceleration and deceleration of the load. After the motor is started, the internal run bypass contactor closes, resulting in the motor running directly across-the-line. Internal run bypass significantly reduces the heat generated as compared to non-bypass starters. The soft stop option allows for a ramp stop time that is longer than the coast-to-stop time.

The built-in solid-state overload protects the motor from overload conditions with sophisticated algorithms that model true motor heating, resulting in better motor protection and fewer nuisance trips. Advanced protective and diagnostic features reduce downtime.

The S752 was designed with safety in mind. The device features a fully motor-rated run bypass contactor. The bypass contactor is capable of breaking the motor load in failed SCR conditions. Short circuit protection ratings are offered with both circuit breakers and fuses. Safety is enhanced with the use of green materials, 24V DC control and finger safe IP20 terminals.

Features and Benefits

- Run bypass significantly reduces the heat generated as compared to non-bypass soft starters. Less heat minimizes enclosure size and cooling requirements and maximizes the life of all devices in the enclosure.
- Run bypass mode greatly reduces internal heating created by the power dissipation across the SCRs. The bypass contactor directly connects the motor to the line and improves system efficiency by reducing internal power losses.
- Solid-state overload protection provides accurate current measurement and trip settings. Sophisticated algorithms solve a series of differential equations that model true motor heating and cooling, resulting in superior motor overload protection while minimizing nuisance trips. Advanced selectable protective features safeguard the motor and system against a variety of system faults.
- Six SCRs control all three motor phases providing smooth acceleration and deceleration performance.
- Easy to read LED displays device status and provides fault indication.
- Internal run bypass contactors and overload protection eliminate the need for additional devices, thereby reducing enclosure sizes, minimizing installation and wiring time and reducing overall assembly size and cost.
- Variable ramp times and torque control settings provide unlimited starting configurations, allowing for maximum application flexibility.
- Soft stop control suits applications where an abrupt stop of the load is not acceptable.

- Wide range of overload FLA settings (31 – 100% of rated current) and selectable trip class (10, 20, 30) allows for wide application range while offering users the flexibility to fine tune the starter to match their specific application requirements.
- Soft acceleration and deceleration reduces wear on belts, gears, chains, clutches, shafts and bearings.
- Minimizes the peak inrush current's stress on the power system.
- Minimizes peak starting torque to diminish mechanical system wear and damage.
- 24V DC control module enhances personnel and equipment safety.
- Removable, lockable control terminal block reduces maintenance replacement costs. Also provides the opportunity for OEMs to reduce assembly and test costs by utilizing pre-assembled wire harnesses.

Protective Features

Motor Overload

The S752 includes electronic overload protection as standard. The overload meets applicable requirements for a motor overload protective device. The overload protects the motor from over heat conditions with the use of sophisticated algorithms that model true motor heating resulting in superior motor protection and fewer nuisance trips.

The S752 calculates a thermal memory value. A 100% value represents the maximum safe temperature of the motor. When the thermal memory value reaches 100%, an overload trip will occur removing power to the motor. Upon trip, the S752 stores the calculated motor heating value and will not allow a motor re-start until the motor has sufficiently cooled. This feature ensures the motor will not be damaged by repeated overload trip and re-start cycles.

The trip current is adjusted to match the specific application requirements by adjusting the overload FLA setting. The FLA adjustment includes a 3 to 1 adjustment range. The overload trip class is selectable for class 10, 20 and 30. The overload is ambient temperature compensated, meaning its trip characteristics will not vary with changes in ambient temperature.

Short Circuit

The use of a short circuit protective device in coordination with the S752 is required in branch motor circuits by most electrical codes. Short circuit coordination ratings with both Cutler-Hammer molded case circuit breakers and fuses are available providing customers with design flexibility. The S752 has short circuit coordination ratings as an open component, an enclosed starter, and in a Motor Control Center.

Pole Over Temperature

High ambient temperatures, extended ramp times and high duty cycle conditions may cause the S752 power pole conductors to reach a temperature that exceeds their thermal rating. The S752 is equipped with sensors that monitor the temperature of the power poles. Over temperature protection exists if the device's thermal capacity is exceeded. The soft starter will trip in over temperature conditions, preventing device failure.

Phase Loss

Loss of a phase can cause a significant increase in current drawn in the remaining two phases. Phase loss can lead to motor damage before an eventual overload trip occurs. Phase loss is typically an indication of a failure in the electrical distribution system. The S752 can detect a phase loss and after 10 seconds a phase loss trip will occur. The phase loss protection can be enabled or disabled.

Phase Imbalance

Phase current or voltage imbalance can cause a significant increase in the current drawn in the other phases. Phase imbalance can lead to motor damage before an eventual overload trip. Phase loss is typically an indication of a failure in the electrical distribution system or the motor. A phase current imbalance trip will occur if one or two of the line currents are 50% or less of the remaining line(s) for longer than 10 seconds. The phase imbalance protection can be enabled or disabled.

Reset Mode

The S752 can be set up for automatic or manual reset on trip. The manual reset mode requires the operator to physically press the RESET button located on the soft starter. The automatic reset mode allows the soft starter to be automatically reset as soon as the trip condition is no longer present. With the automatic reset mode, after the fault is no longer present, the motor will be restarted as soon as a valid start signal is present. The overload can be reset through the communications network. The overload can also be electrically reset by energizing a 24V DC control input on the control terminal block.

Bypass Dropout

The S752 can detect if the bypass contactor fails to close after the ramp start or opens while the motor is running. The S752 will trip on a bypass dropout fault if either of these conditions occur.

Diagnostic Features

The S752 has an easy to read LED that displays the device status as well as identifying the condition that caused a fault. The fault display is a useful tool in system troubleshooting. The following fault cross-reference is listed on the overload cover of the device to facilitate fault identification:

Table 39-13. S752 Diagnostic Features

LED Display Code	Device Status or Fault
0	Ready To Start
1	Line Phase Reversal
2	Phase Loss Fault
3	Phase Imbalance Fault
4	SCR Over Temperature Fault
5	Overload Trip Fault
6	Test Trip Fault
7	Bypass Dropout Fault
8	Overload Communications Fault
9	Temperature Sensor Fault

Communication Capabilities

Communications are enabled with the S752 soft starter with the addition of a SNAP (Starter Network Adapter Product). The SNAP allows for network control and monitoring of system parameters. See **Tab 50** for more information on SNAPs.

Operation

Voltage Ramp Start

Provides a voltage ramp to the motor resulting in a constant torque increase. The most commonly used form of soft start, this start mode allows you to set the initial torque value and the duration of the ramp to full voltage conditions. Bypass contactor(s) close after ramp time.

- Adjustable initial torque 0 – 95% of locked rotor torque.
- Adjustable ramp time .5 – 30 seconds.

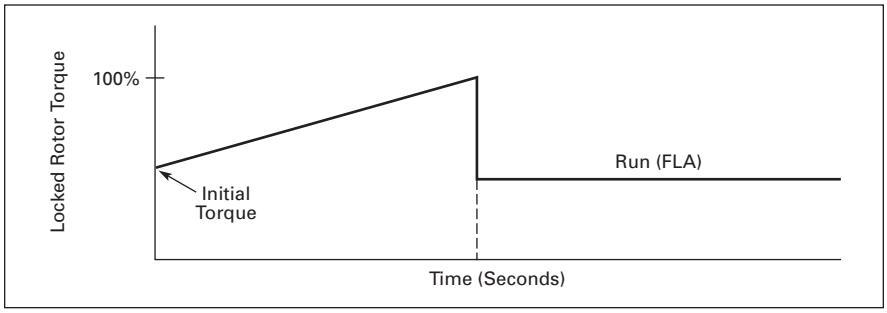

Figure 39-5. Starting Characteristics — Ramp Start

Soft Stop

Allows for a controlled stopping of a load. Used when a stop-time that is greater than the coast-to-stop time is desired. Often used with high friction loads where a sudden stop may cause system or product damage.

- Stop time = 0 – 30 seconds.

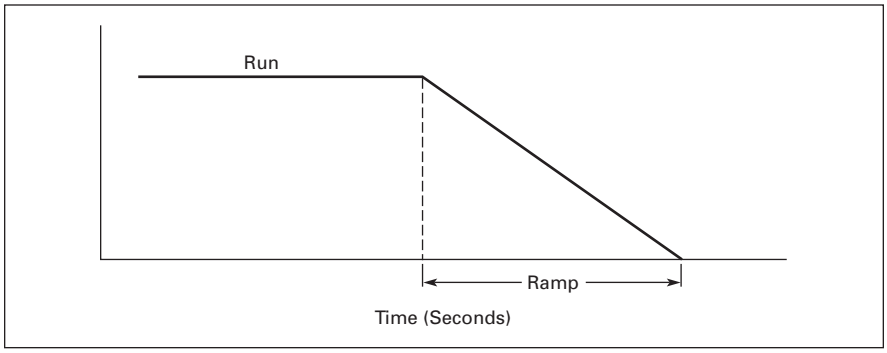

Figure 39-6. Starting Characteristics — Soft Stop

Catalog Number Selection

Table 39-14. S752 Open Soft Starters Catalog Numbering System

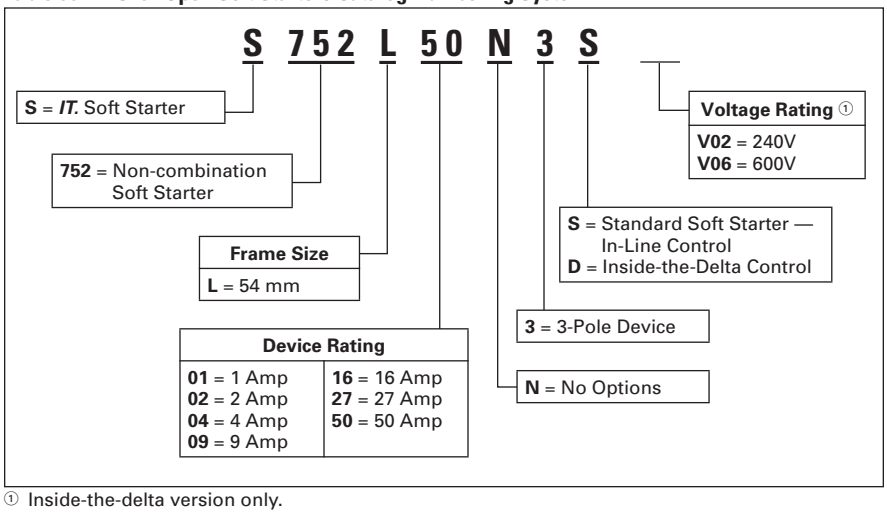

① Inside-the-delta version only.

Product Selection

IT. S752 Product Selection — In-Line

Standard Duty Ratings

Standard duty ratings are defined as those that do not exceed any of the following operating conditions:

- 25 second ramp, 2 starts per hour, 40°C ambient, 300% FLA current
- 15 second ramp, 4 starts per hour, 40°C ambient, 300% FLA current
- 10 second ramp, 6 starts per hour, 40°C ambient, 300% FLA current
- 7.5 second ramp, 8 starts per hour, 40°C ambient, 300% FLA current
- 3.0 second ramp, 15 starts per hour, 40°C ambient, 300% FLA current

Table 39-15. *IT.* S752 Soft Starter Standard Duty Ratings ① — In-Line

Maximum Continuous Current	FLA Current Range	kW Rating (50 Hz)			Horsepower Rating (60 Hz)				Catalog Number	Price U.S. $
		230V	380 – 400V	440V	200V	230V	460V	575V		
0.8	0.25 – 0.8	0.3	0.37	0.55	1/8	1/6	1/3	1/3	**S752L01N3S**	
1.9	0.59 – 1.9	0.6	1.1	1.1	1/3	1/3	3/4	1	**S752L02N3S**	
4.4	1.4 – 4.4	1.5	2.2	3	3/4	1	2	3	**S752L04N3S**	
9	2.8 – 9.0	3	5.5	5.5	2	2	5	7-1/2	**S752L09N3S**	
16	5.0 – 16	5.5	10	11	3	5	10	10	**S752L16N3S**	
27	8.4 – 27	10	15	18.5	7-1/2	7-1/2	20	25	**S752L27N3S**	
50	16 – 50	12.5	22	30	15	15	30	40	**S752L50N3S**	

① For applications above 40°C, derate 1% per °C.

Heavy Duty Ratings

Heavy duty ratings are defined as those that do exceed any of the following operating conditions:

- 25 second ramp, 2 starts per hour, 40°C ambient, 400% FLA current
- 15 second ramp, 4 starts per hour, 40°C ambient, 400% FLA current
- 10 second ramp, 6 starts per hour, 40°C ambient, 400% FLA current
- 7.5 second ramp, 8 starts per hour, 40°C ambient, 400% FLA current
- 3.0 second ramp, 15 starts per hour, 40°C ambient, 400% FLA current

Table 39-16. *IT.* S752 Soft Starter Heavy Duty Ratings ② — In-Line

Maximum Continuous Current	FLA Current Range	kW Rating (50 Hz)			Horsepower Rating (60 Hz)				Catalog Number	Price U.S. $
		230V	380 – 400V	440V	200V	230V	460V	575V		
0.8	0.25 – 0.8	0.3	0.37	0.55	1/8	1/6	1/3	1/3	**S752L01N3S**	
1.9	0.59 – 1.9	0.6	1.1	1.1	1/3	1/3	3/4	1	**S752L02N3S**	
4.4	1.4 – 4.4	1.5	2.2	3	3/4	1	2	3	**S752L04N3S**	
9	2.8 – 9.0	3	5.5	5.5	2	2	5	7-1/2	**S752L09N3S**	
16	5.0 – 16	5.5	10	11	3	5	10	10	**S752L16N3S**	
27	8.4 – 27	10	15	18.5	5	7-1/2	15	20	**S752L27N3S**	
50	16 – 50	12.5	15	20	7-1/2	10	20	25	**S752L50N3S**	

② For applications above 40°C, derate 1% per °C.

Severe Duty Ratings

Severe Duty ratings are defined as those that do exceed any of the Heavy Duty operating conditions. Please contact the Technical Resource Center for Severe Duty application assistance.

Discount Symbol **1CD1**

IT. S752 Product Selection — Inside-the-Delta

Standard Duty Ratings

Standard duty ratings are defined as those that do not exceed any of the following operating conditions:

- 10 second ramp, 6 starts per hour, 40°C ambient, 300% FLA current
- 7.5 second ramp, 8 starts per hour, 40°C ambient, 300% FLA current
- 3.0 second ramp, 15 starts per hour, 40°C ambient, 300% FLA current

Table 39-17. *IT.* S752 Soft Starter Standard Duty Ratings ① — Inside-the-Delta

Maximum Continuous Current	FLA Current Range	kW Rating (50 Hz)			Horsepower Rating (60 Hz)				Catalog Number ②	Price U.S. $
		230V	380 – 400V	440V	200V	230V	460V	575V		
1.3	0.44 – 1.3	0.18	0.37	0.55	1/4	1/3	1/2	3/4	**S752L01N3D_ _ _**	
3.2	1.1 – 3.2	0.55	1.1	1.5	1/2	3/4	1-1/2	2	**S752L02N3D_ _ _**	
7.6	2.5 – 7.6	1.5	3	4	1-1/2	1-1/2	3	5	**S752L04N3D_ _ _**	
15	4.9 – 15	3.7	6.5	8	3	3	7-1/2	10	**S752L09N3D_ _ _**	
27	8.7 – 27	6.5	12.5	15	7-1/2	7-1/2	15	25	**S752L16N3D_ _ _**	
46	15 – 46	12.5	22	25	10	15	30	40	**S752L27N3D_ _ _**	
78	28 – 86	22	37	45	25	25	60	75	**S752L50N3D_ _ _**	

① For applications above 40°C, derate 1% per °C.
② For Voltage Suffix, See **Table 39-18**.

Table 39-18. Voltage Suffix Code

Voltage Suffix	Voltage
V02	< 240V
V06	250 – 600V

Heavy Duty Ratings

Heavy duty ratings are defined as those that do not exceed any of the following operating conditions:

- 10 second ramp, 6 starts per hour, 40°C ambient, 400% FLA current
- 7.5 second ramp, 8 starts per hour, 40°C ambient, 400% FLA current
- 3.0 second ramp, 15 starts per hour, 40°C ambient, 400% FLA current

Table 39-19. *IT.* S752 Soft Starter Heavy Duty Ratings ③ — Inside-the-Delta

Maximum Continuous Current	FLA Current Range	kW Rating (50 Hz)			Horsepower Rating (60 Hz)				Catalog Number ④	Price U.S. $
		230V	380 – 400V	440V	200V	230V	460V	575V		
1.3	0.44 – 1.3	0.18	0.37	0.55	1/4	1/3	1/2	3/4	**S752L01N3D_ _ _**	
3.2	1.1 – 3.2	0.55	1.1	1.5	1/2	3/4	1-1/2	2	**S752L02N3D_ _ _**	
7.6	2.5 – 7.6	1.5	3	4	1-1/2	1-1/2	3	5	**S752L04N3D_ _ _**	
15	4.9 – 15	3.7	6.5	8	3	3	7-1/2	10	**S752L09N3D_ _ _**	
27	8.7 – 27	6.5	12.5	15	7-1/2	7-1/2	15	25	**S752L16N3D_ _ _**	
46	15 – 46	12.5	22	25	10	15	30	40	**S752L27N3D_ _ _**	
78	28 – 86	15	25	30	15	20	40	60	**S752L50N3D_ _ _**	

③ For applications above 40°C, derate 1% per °C.
④ For Voltage Suffix, See **Table 39-20**.

Table 39-20. Voltage Suffix Code

Voltage Suffix	Voltage
V02	< 240V
V06	250 – 600V

Severe Duty Ratings

Severe Duty ratings are defined as those that do exceed any of the Heavy Duty operating conditions. Please contact the Technical Resource Center for Severe Duty application assistance.

Discount Symbol **1CD1**

Accessories

Auxiliary Contacts

The S752 allows for the use of top mounted auxiliary contacts. These contacts can be used for up-to-speed indication.

Table 39-21. S752 Auxiliary Contacts

Poles	Catalog Number	Price U.S. $
1NO 1NC 1NO/1NC	**EMA13** **EMA14** **EMA15**	
2NO 2NC 1NO/1NC Logic Level	**EMA16** **EMA17** **EMA70**	

Table 39-22. S752 — Maximum Number of Auxiliary Contacts

EMA13 1NO	EMA14 1NC	EMA15 1NO/1NC	EMA16 2NO	EMA17 2NC	EMA70 1NO/1NC Logic Level
3	3	2 ①	2 ①	2 ①	3

① One EMA70 or one EMA13/EMA14 may be used in the center position in conjunction with two of these devices in the outer positions.

Table 39-23. S752 — Auxiliary Contact Ratings (EMA13 – EMA17)

DC-13		AC-15	
U_e Voltage	I_e Amps	U_e Voltage	I_e Amps
24 48	5 2.5	48 120	8 6
125 250	1.1 0.55	240 440	4 2

Table 39-24. S752 — Auxiliary Contact Ratings (EMA70)

DC-12		AC-12	
U_e Voltage	I_e Amps	U_e Voltage	I_e Amps
30	0.1	250	0.1

Renewal Parts

The only renewal part available for the S752 Soft Starter is the Control Terminal Block. There are no serviceable or replaceable internal parts.

Table 39-25. S752 Control Terminal Block

Description	Catalog Number	Price U.S. $
Locking Terminal Block	**EMA76LS**	

S751 Replacement Cross-Reference

The S752 has replaced the S751 in the Cutler-Hammer product offering. **Table 39-26** summarizes the S752 Catalog Numbers that are used to replace an existing S751 device:

Table 39-26. S751 Replacement Cross-Reference

Current Range in Amps	S751 Catalog Number	Replacement S752 Catalog Number
0.25 – 0.8	**S751L01N3S**	**S752L01N3S**
0.59 – 1.9	**S751L02N3S**	**S752L02N3S**
1.4 – 4.4	**S751L04N3S**	**S752L04N3S**
2.8 – 9.0	**S751L09N3S**	**S752L09N3S**
5.0 – 16	**S751L16N3S**	**S752L16N3S**
8.4 – 27	**S751L27N3S**	**S752L27N3S**

Standards and Certifications

- IEC 60947-4-2
- EN 60947-4-2
- UL Listed (NMFT)
- CSA Certified (321106)
- CSA Elevator Duty (241103)
- CE marked

Instructional Leaflets

Instruction Manual	MN03902001E
Outline Drawings	S752: 10-8673 S751: 10-8328

Discount Symbol **1CD1**

Technical Data and Specifications

Table 39-27. S752 Open Soft Starters

Soft Starter (Partial Catalog Number)	S752 L01	S752 L02	S752 L04	S752 L09	S752 L16	S752 L27	S752 L50
In-Line Current Capacity	0.8	1.9	4.4	9.0	16	27	50
Inside-the-Delta Current Capacity	1.3	3.2	7.6	15	27	46	78
Dimensions							
Width in Inches (mm)	2.14 (54)	2.14 (54)	2.14 (54)	2.14 (54)	2.14 (54)	2.14 (54)	2.14 (54)
Height in Inches (mm)	7.78 (198)	7.78 (198)	7.78 (198)	7.78 (198)	7.78 (198)	7.78 (198)	7.78 (198)
Depth in Inches (mm)	5.13 (130)	5.13 (130)	5.13 (130)	5.13 (130)	5.13 (130)	5.13 (130)	5.13 (130)
Weight in lbs. (kg)	3.5 (1.6)	3.5 (1.6)	3.5 (1.6)	3.5 (1.6)	3.5 (1.6)	3.5 (1.6)	3.5 (1.6)
Drawing	See **Figure 39-7.**						
Electrical Characteristics							
Line Voltage (V AC)	200 – 600	200 – 600	200 – 600	200 – 600	200 – 600	200 – 600	200 – 600
Operating Frequency (Hz)	47 – 63	47 – 63	47 – 63	47 – 63	47 – 63	47 – 63	47 – 63
Leakage Current	15 mA AC max.						
Min. Operating Current	100 mA						
Control Voltage (24V DC ±10%)	21.6 – 26.4	21.6 – 26.4	21.6 – 26.4	21.6 – 26.4	21.6 – 26.4	21.6 – 26.4	21.6 – 26.4
Response Time Max.	100 mS	100 mS	100 mS	100 mS	100 mS	100 mS	100 mS
Control Steady State Current	200 mA	200 mA	200 mA	200 mA	200 mA	200 mA	200 mA
Inrush Current (During Bypass)	3.6A @ 50 mS	3.6A @ 50 mS	3.6A @ 50 mS	3.6A @ 50 mS	3.6A @ 50 mS	3.6A @ 50 mS	3.6A @ 50 mS
Control Wiring							
(+ and -) 1 Wire per Terminal	14 – 12 AWG (1.5 – 2.5 mm^2)	14 – 12 AWG (1.5 – 2.5 mm^2)	14 – 12 AWG (1.5 – 2.5 mm^2)	14 – 12 AWG (1.5 – 2.5 mm^2)	14 – 12 AWG (1.5 – 2.5 mm^2)	14 – 12 AWG (1.5 – 2.5 mm^2)	14 – 12 AWG (1.5 – 2.5 mm^2)
(+ and -) 2 Wires per Terminal	14 AWG (1.5 mm^2)	14 AWG (1.5 mm^2)	14 AWG (1.5 mm^2)	14 AWG (1.5 mm^2)	14 AWG (1.5 mm^2)	14 AWG (1.5 mm^2)	14 AWG (1.5 mm^2)
(P,F,1,2,3) 1 Wire per Terminal	22 – 12 AWG (0.5 – 2.5 mm^2)	22 – 12 AWG (0.5 – 2.5 mm^2)	22 – 12 AWG (0.5 – 2.5 mm^2)	22 – 12 AWG (0.5 – 2.5 mm^2)	22 – 12 AWG (0.5 – 2.5 mm^2)	22 – 12 AWG (0.5 – 2.5 mm^2)	22 – 12 AWG (0.5 – 2.5 mm^2)
(P,F,1,2,3) 2 Wires per Terminal	18 – 14 AWG (0.75 – 1.5 mm^2)	18 – 14 AWG (0.75 – 1.5 mm^2)	18 – 14 AWG (0.75 – 1.5 mm^2)	18 – 14 AWG (0.75 – 1.5 mm^2)	18 – 14 AWG (0.75 – 1.5 mm^2)	18 – 14 AWG (0.75 – 1.5 mm^2)	18 – 14 AWG (0.75 – 1.5 mm^2)
Torque (max.)	4.5 lb-in (0.5 Nm)	4.5 lb-in (0.5 Nm)	4.5 lb-in (0.5 Nm)	4.5 lb-in (0.5 Nm)	4.5 lb-in (0.5 Nm)	4.5 lb-in (0.5 Nm)	4.5 lb-in (0.5 Nm)
Driver	0.13 (3.5 mm) Flat	0.13 (3.5 mm) Flat	0.13 (3.5 mm) Flat	0.13 (3.5 mm) Flat	0.13 (3.5 mm) Flat	0.13 (3.5 mm) Flat	0.13 (3.5 mm) Flat
Terminals L1, L2, L3/T1, T2, T3 — Use Class B 75°C copper wire only							
1 Wire per Terminal	14 – 4 AWG (1.5 – 16 mm^2)	14 – 4 AWG (1.5 – 16 mm^2)	14 – 4 AWG (1.5 – 16 mm^2)	14 – 4 AWG (1.5 – 16 mm^2)	14 – 4 AWG (1.5 – 16 mm^2)	14 – 4 AWG (1.5 – 16 mm^2)	14 – 4 AWG (1.5 – 16 mm^2)
2 Wires per Terminal	14 – 6 AWG (1.5 – 12 mm^2)	14 – 6 AWG (1.5 – 12 mm^2)	14 – 6 AWG (1.5 – 12 mm^2)	14 – 6 AWG (1.5 – 12 mm^2)	14 – 6 AWG (1.5 – 12 mm^2)	14 – 6 AWG (1.5 – 12 mm^2)	14 – 6 AWG (1.5 – 12 mm^2)
Torque (max.) 14 – 10 AWG (1.5 – 6 mm^2) 8 AWG (10 mm^2) 6 – 4 AWG (6 – 4 mm^2)	35 lb-in (4 Nm) 40 lb-in (4.5 Nm) 45 lb-in (5 Nm)	35 lb-in (4 Nm) 40 lb-in (4.5 Nm) 45 lb-in (5 Nm)	35 lb-in (4 Nm) 40 lb-in (4.5 Nm) 45 lb-in (5 Nm)	35 lb-in (4 Nm) 40 lb-in (4.5 Nm) 45 lb-in (5 Nm)	35 lb-in (4 Nm) 40 lb-in (4.5 Nm) 45 lb-in (5 Nm)	35 lb-in (4 Nm) 40 lb-in (4.5 Nm) 45 lb-in (5 Nm)	35 lb-in (4 Nm) 40 lb-in (4.5 Nm) 45 lb-in (5 Nm)
Connector Type	Box Lug	Box Lug	Box Lug	Box Lug	Box Lug	Box Lug	Box Lug
Driver	3mm Hex Key	3mm Hex Key	3mm Hex Key	3mm Hex Key	3mm Hex Key	3mm Hex Key	3mm Hex Key
Environmental Characteristics							
Temperature — Operating (no derating)	-35° – 50°C	-35° – 50°C	-35° – 50°C	-35° – 50°C	-35° – 50°C	-35° – 50°C	-35° – 50°C
Temperature — Derate >50°C (max. 65°C)	-1% per °C	-1% per °C	-1% per °C	-1% per °C	-1% per °C	-1% per °C	-1% per °C
Temperature — Storage	-40° – 80°C	-40° – 80°C	-40° – 80°C	-40° – 80°C	-40° – 80°C	-40° – 80°C	-40° – 80°C
Altitude (Meters) — No Derating	2000	2000	2000	2000	2000	2000	2000
Altitude > 2000M	1% per 100m	1% per 100m	1% per 100m	1% per 100m	1% per 100m	1% per 100m	1% per 100m
Humidity	95% Non-condensing						
Operating Position	Vertical ± 30°						
Impulse Withstand Voltage IEC 947-4-1	4000V	4000V	4000V	4000V	4000V	4000V	4000V
Rated Insulation Voltage (Ui)	660V						
Installation Category	III						
Vibration	IEC 68-2-6 3g 10 – 150 Hz						
Shock	15g	15g	15g	15g	15g	15g	15g
Degree of Protection	IP20	IP20	IP20	IP20	IP20	IP20	IP20
Agency Approvals	UL, CSA, CE						

Dimensions

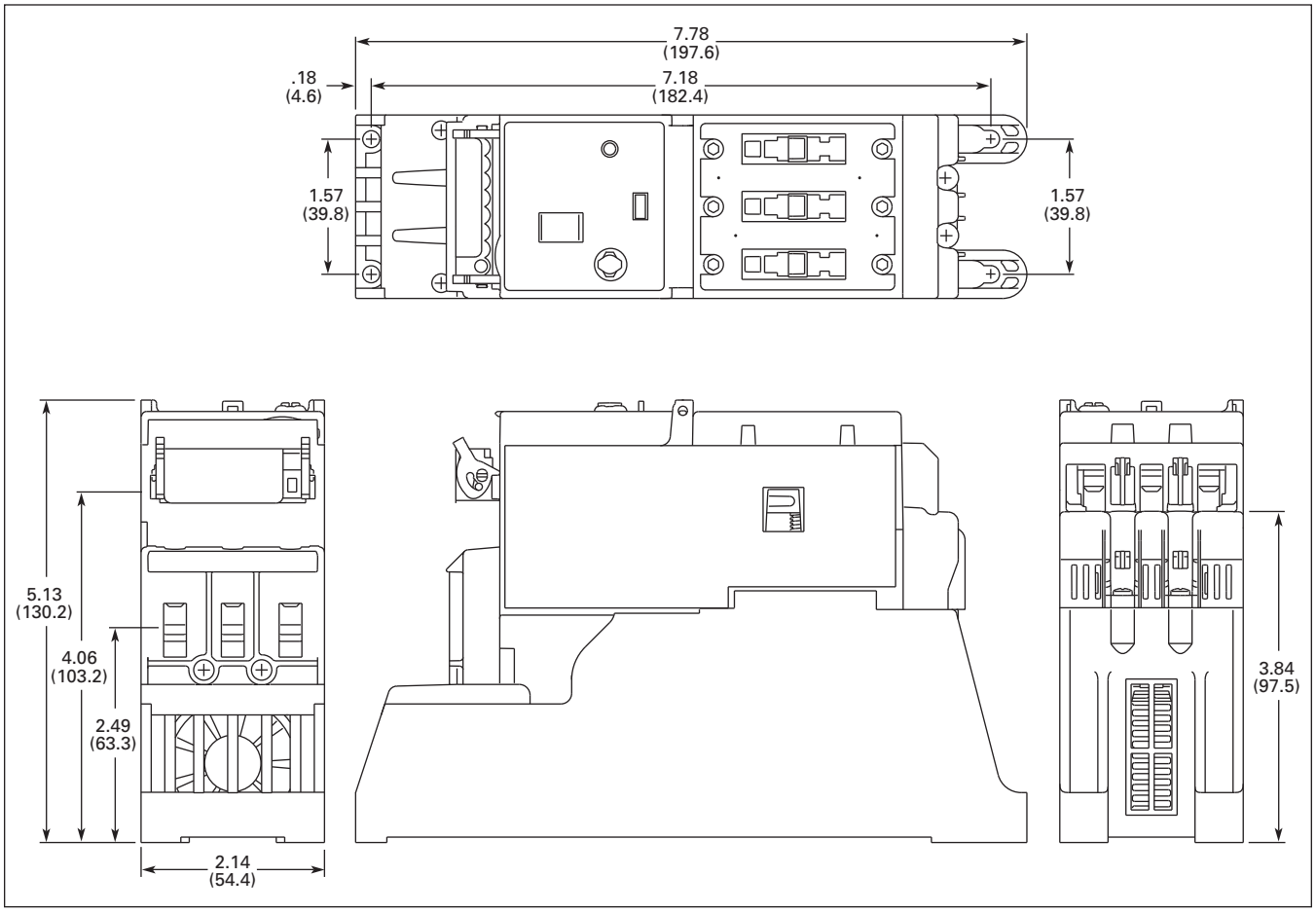

Figure 39-7. S752 Approximate Dimensions in Inches (mm)

Contents

Description *Page*

Type S801, Intelligent Technologies *(IT.)* Soft Starters

Product Description **39-22**
Application Description **39-22**
Features **39-22**
Benefits. **39-22**
Operation **39-22**
Catalog Number Selection **39-24**
Product Selection **39-25**
Options. **39-31**
Accessories **39-31**
Standards and Certifications **39-33**
Technical Data and Specifications **39-33**
Dimensions **39-34**

S801

Product Description

Eaton's Cutler-Hammer® Intelligent Technologies (***IT.***) S801 Line of Reduced Voltage Soft Starters is very compact, multi-functional, easy to install and easy to program. Designed to control acceleration and deceleration of 3-phase motors, the line is available for current ranges from 12 amp all the way through 1000 amp applications and is suitable for mounting in motor control centers or in enclosed control (NEMA 1, 4, 4X and 12) applications.

Application Description

The S801 line of ***IT.*** Soft Starters is designed to be the smallest, most compact soft starter in the market today. With this small size, it can easily fit in place of existing soft starter designs, wye-delta starters or across-the-line NEMA and IEC starters. This feature allows easy retrofits of existing Motor Control Centers or Enclosures and saves the expense of replacing existing structure or adding a new one to house a soft starter.

The product is designed to work with 3-phase motors in a Delta (3-lead) configuration. The S801 works with all motors from fractional horsepower up to motors requiring 1000 amps of steady state current. The built-in overload (in ranges from 12 – 1000 amps) and run bypass contactor make installation and setup quick and easy. The overload also offers some advanced protective functions to give additional motor protection.

With the pump control option, it is the number one soft starter available for pumping applications. The unique soft stopping control provides a smooth transition for stopping a motor and eliminates the "water-hammer" effect that can damage pipes, valves and pumps.

Features

- Built-in overload protection
- Built-in run bypass contactor
- Adjustable ramp times
- Adjustable torque control
- Adjustable kick start control
- Programmable overload settings, 31 – 100% (3.2:1) of rated current for the unit
- Physically fits in place of most NEMA and IEC starters
- Easy to use control interface module
- Soft stop control
- Multiple trip class settings (5, 10, 20 and 30)
- Six SCR control
- Optional pump control

Benefits

- Reduced wear on belts, gears, chains, clutches, shafts and bearings
- Allows for controlling the inrush current to the motor
- Reduced inrush current leads to more stable power grid and can lower peak demand charges
- Elimination of water-hammer in pumping applications
- Less shock to product on conveyor lines and material handling gear
- 24V DC control enhances personnel and equipment safety

Operation

Overload Functionality

Overtemperature

Protects the device from overheating. Starter will shutdown at 110°C.

Jam

Selectable protective feature, unit trips to prevent damage to motor during normal run.

Stall

Selectable protective feature, unit trips to protect system in event motor can not get to rated speed in the defined ramp period.

Phase Loss

Selectable protective feature, trips under voltage loss condition to any phase.

Phase Reversal

Selectable protective feature, trips when phase rotation is something other than A-B-C.

Kick Start

Selectable feature which provides a current "kick" of up to 550% of full load current for 0 to 2.0 seconds. This provides the additional torque required at startup to break free a motor.

Ramp Start

Provides a constant increase in torque to the motor.

Current Limit Start

Limits the maximum current available to the motor during the startup phase.

Soft Stop

Allows for a controlled stopping of a frictional load.

Shorted SCR Detection

Monitors for shorted SCR in the power polls.

Starting Characteristics

Kick Start

Provides an initial boost of current to the motor to help break free the rotor and start spinning the motor.

- 0 – 85% of locked rotor torque.
- 0 – 2.0 seconds duration.

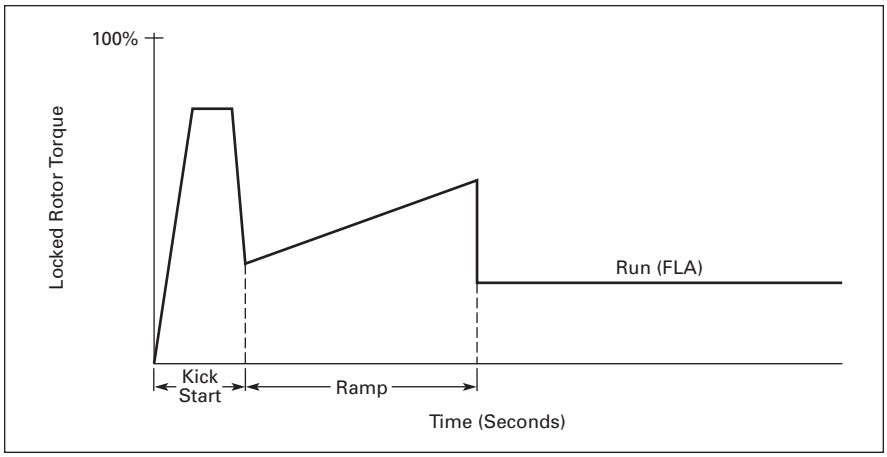

Figure 39-8. Starting Characteristics — Kick Start

Ramp Start

The most commonly used form of soft start. This allows you to set the initial torque value (of the ramp) and then raises it to full voltage conditions.

- Adjustable initial torque = 0 – 85% of locked rotor torque.
- Adjustable ramp time = .5 – 180 seconds (can be extended with factory modification).

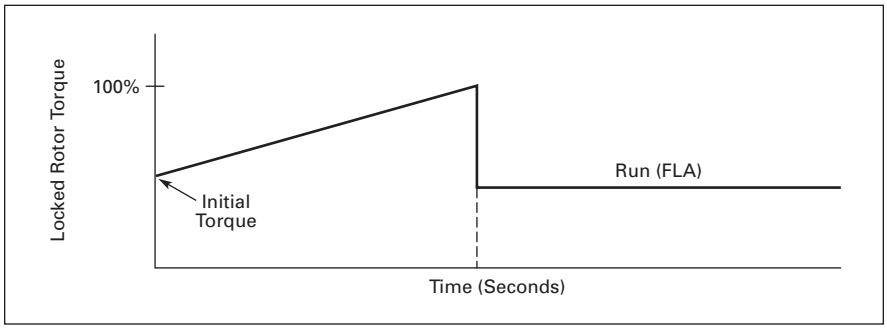

Figure 39-9. Starting Characteristics — Ramp Start

Current Limit

This mode of soft starting is used when it becomes necessary to limit the maximum starting current due to long start times or to protect the motor.

- Maximum current of 0 – 85% locked rotor current.
- Adjustable ramp time = .5 – 180 seconds (can be extended with factory modification).

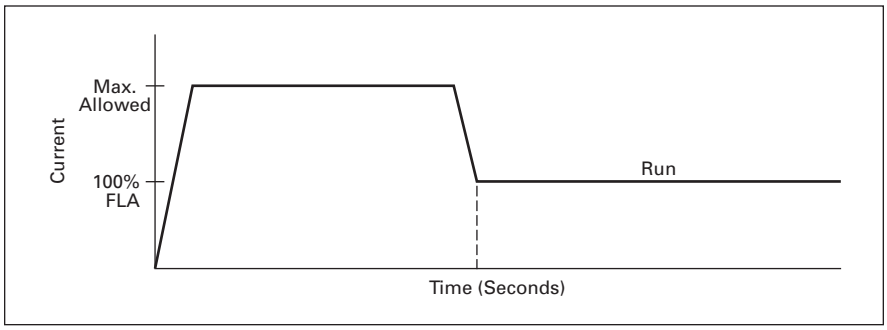

Figure 39-10. Starting Characteristics — Current Limit

Soft Stop

Used when an extended coast-to-rest period is desired. Often used with high friction loads where a sudden stop may cause system or product damage.

- Stop time = 0 – 60 seconds.

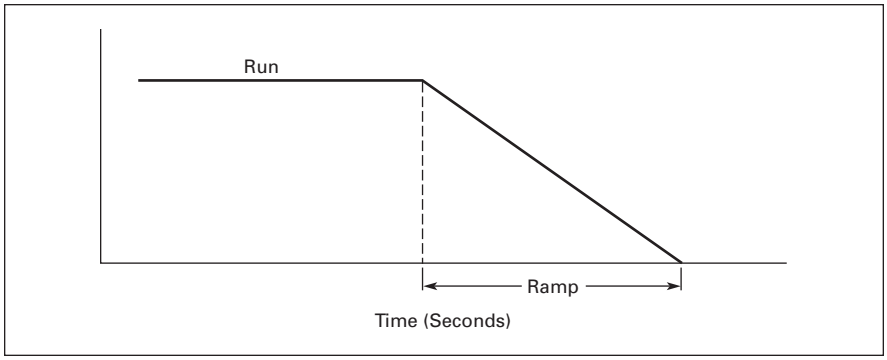

Figure 39-11. Starting Characteristics — Soft Stop

Catalog Number Selection

Table 39-28. S801 Open Soft Starters Catalog Numbering System

S 801 N66 N 3 S

S = *IT.* Soft Starter

801 = Non-combination Soft Starter

Ampacity Rating	
N37 = 37 amps	**U50** = 500 amps ②
N66 = 66 amps	**V36** = 360 amps
R10 = 105 amps	**V42** = 420 amps
R13 = 135 amps	**V50** = 500 amps
T18 = 180 amps	**V65** = 650 amps
T24 = 240 amps	**V72** = 720 amps
T30 = 304 amps	**V85** = 850 amps
U36 = 360 amps	**V10** = 1000 amps
U42 = 420 amps	

N = No Options
P = Pump Control
V = 690 Volt Option ①

3 = 3-Pole Device

B = Level Sensing
D = Inside the Delta
L = Extended Ramp Start
S = Standard Soft Starter Overload
W = Without CIM (Control Interface Module)

① Not available on U-Frame.
② U-Frame 500 Amp unit does not have IEC Certification.

65 mm, Catalog Number S801N

110 mm, Catalog Number S801R

200 mm, Catalog Number S801T

290 mm, Catalog Number S801V

Product Selection

Base Ratings

The table below is the base ratings for the ***IT.*** Soft Starter. The tables included in this catalog are meant to be a selection table for different applications, but to match a unit to your exact application, consult with your local Eaton representative or call our Technical Resource Center.

Table 39-29. Standard Duty Ratings

Starting Method	Ramp Current % of FLA	Ramp Time Seconds	Starts per Hour	Ambient Temperature
vs. Soft Start	300%	30 sec.	3	50°C
vs. Full Voltage	500%	10 sec.	3	50°C
vs. Wye-Delta	350%	20 sec.	3	50°C
vs. 80% RVAT	480%	20 sec.	2	50°C
vs. 65% RVAT	390%	20 sec.	3	50°C
vs. 50% RVAT	300%	20 sec.	4	50°C

Table 39-30. Product Selection — Standard Duty Rating Open Soft Starters

Max. Current	Three-Phase Motor											Catalog Number ①②	Price U.S. $
	kW Rating (50 Hertz)			hp Rating (60 Hertz)									
	230	380 – 400	440	200V		230V		460V		575V			
	Volt	Volt	Volt	1.0SF	1.15SF	1.0SF	1.15SF	1.0SF	1.15SF	1.0SF	1.15SF		
Frame Size N													
37	10	18.5	18.5	10	10	10	10	25	20	30	30	**S801N37N3S**	
66	18.5	30	37	20	15	20	20	50	40	60	50	**S801N66N3S**	
Frame Size R													
105	30	55	59	30	25	40	30	75	60	100	75	**S801R10N3S**	
135	40	63	80	40	30	50	40	100	75	125	100	**S801R13N3S**	
Frame Size T													
180	51	90	110	60	50	60	60	150	125	150	150	**S801T18N3S**	
240	75	110	147	75	60	75	75	200	150	200	200	**S801T24N3S**	
304	90	160	185	100	75	100	100	250	200	300	250	**S801T30N3S**	
Frame Size U													
360	110	185	220	125	100	150	125	300	250	350	300	**S801U36N3S**	
420	129	220	257	150	125	175	150	350	300	450	350	**S801U42N3S**	
500	150	257	300	150	150	200	150	400	350	500	450	**S801U50N3S** ③④	
Frame Size V													
360	110	185	220	125	100	150	125	300	250	350	300	**S801V36N3S**	
420	129	220	257	150	125	175	150	350	300	450	350	**S801V42N3S**	
500	150	257	300	150	150	200	150	400	350	500	450	**S801V50N3S**	
650	200	355	425	250	200	250	200	500	450	600	500	**S801V65N3S**	
720	220	400	450	—	—	300	250	600	500	700	600	**S801V72N3S**	
850	257	475	500	—	—	350	300	700	600	900	700	**S801V85N3S**	
1000	315	560	600	—	—	400	350	800	700	1000	800	**S801V10N3S** ⑤	

① For a longer ramp acceleration time of .5 to 360 seconds, see **Page 39-31**.
② For 2-wire (level sensing) control, change the last digit from **S** to **B**.
③ 15 sec. start, 300% inrush, 40°C, 1 start every 15 minutes. If these start parameters are exceeded, please refer to 290 mm V-Frame, 500A starter.
④ U-Frame 500 Amp does not have IEC Certification.
⑤ For more information on optimum performance of the 1000A Frame Size V S801, see Appendix C of MN03902008E.

Discount Symbol **1CD1**

Severe Duty Ratings

Motor applications and customer needs come in many different varieties. With the standard and severe duty rating tables, we have attempted to provide guidelines on what the ***IT.*** Soft Starter is capable of. If the application falls under these categories, you can use these charts. For other applications, or when a question arises, a program in Bid Manager is designed to assist you in selecting the proper soft starter.

Table 39-31. Severe Duty Ratings

Starting Method	Ramp Current % of FLA	Ramp Time Seconds	Starts per Hour	Ambient Temperature
vs. Soft Start	450%	30 sec.	4	50°C
vs. Full Voltage	500%	10 sec.	10	50°C
vs. Wye-Delta	350%	65 sec.	3	50°C
vs. 80% RVAT	480%	25 sec.	4	50°C
vs. 65% RVAT	390%	40 sec.	4	50°C
vs. 50% RVAT	300%	60 sec.	4	50°C

Table 39-32. Product Selection — Severe Duty Rating Open Soft Starters

Max. Current	Three-Phase Motor											Catalog Number ①②	Price U.S. $
	kW Rating (50 Hertz)			hp Rating (60 Hertz)									
	230	380 – 400	440	200V		230V		460V		575V			
	Volt	Volt	Volt	1.0SF	1.15SF	1.0SF	1.15SF	1.0SF	1.15SF	1.0SF	1.15SF		
Frame Size N													
22	5.5	10	11	5	5	7-1/2	5	15	10	20	15	**S801N37N3S**	
42	11	18.5	22	10	10	15	10	30	25	40	30	**S801N66N3S**	
Frame Size R													
65	15	30	33	15	15	20	15	50	40	50	50	**S801R10N3S**	
80	22	40	45	25	20	30	25	60	50	75	60	**S801R13N3S**	
Frame Size T													
115	33	59	63	30	30	40	30	75	75	100	100	**S801T18N3S**	
150	45	80	90	50	40	50	50	100	100	150	125	**S801T24N3S**	
192	55	100	110	60	50	75	60	150	125	200	150	**S801T30N3S**	
Frame Size U													
240	75	110	147	75	60	75	75	200	150	200	200	**S801U36N3S**	
305	90	160	185	100	75	100	100	250	200	300	250	**S801U42N3S**	
365	110	185	220	125	100	150	125	300	250	350	300	**S801U50N3S** ③	
Frame Size V													
240	75	110	147	75	60	75	75	200	150	200	200	**S801V36N3S**	
305	90	160	185	100	75	100	100	250	200	300	250	**S801V42N3S**	
365	110	185	220	125	100	150	125	300	250	350	300	**S801V50N3S**	
420	129	220	257	150	125	150	150	350	300	450	350	**S801V65N3S**	
480	147	257	295	150	150	200	150	400	350	500	450	**S801V72N3S**	
525	160	280	335	150	150	200	150	450	350	500	450	**S801V85N3S**	
600	185	315	375	200	150	250	200	500	450	600	500	**S801V10N3S** ④	

① For a longer ramp acceleration time of .5 to 360 seconds, see **Page 39-31**.
② For 2-wire (level sensing) control, change the last digit from **S** to **B**.
③ U-Frame 500 Amp unit does not have IEC Certification.
④ For more information on optimum performance of the 1000A Frame Size V S801, see Appendix C of MN03902008E.

Discount Symbol **1CD1**

Inside-the-Delta Standard Duty Ratings

Table 39-33. 15 Second Ramp, 4 Starts per Hour, 300% Current Limit @ 40°C Ambient

Max. Continuous Motor Line Current	Three-Phase Motor											Catalog Number	Price U.S. $
	kW Rating (50 Hertz)			hp Rating (60 Hertz)									
	230	380 – 400	440	200V		230V		460V		575V			
	Volt	Volt	Volt	1.0SF	1.15SF	1.0SF	1.15SF	1.0SF	1.15SF	1.0SF	1.15SF		
Frame Size N													
65	10	18.5	18.5	15	15	15	15	40	30	50	50	**S801N37N3D**	
114	18.5	30	37	30	25	30	30	75	60	100	75	**S801N66N3D**	
Frame Size R													
182	30	55	59	50	40	60	50	125	100	150	125	**S801R10N3D**	
234	40	63	80	60	50	75	60	150	125	200	150	**S801R13N3D**	
Frame Size T													
311	51	90	110	100	75	100	100	250	200	250	250	**S801T18N3D**	
415	75	110	147	125	100	125	125	300	250	300	300	**S801T24N3D**	
526	90	160	185	150	125	150	150	400	300	400	400	**S801T30N3D**	
Frame Size U													
623	110	185	220	200	150	250	200	450	400	550	450	**S801U36N3D**	
727	129	220	257	250	200	300	250	550	450	700	550	**S801U42N3D**	
865	150	257	300	250	250	300	250	600	550	750	700	**S801U50N3D** ①②	
Frame Size V													
623	110	185	220	200	150	250	200	450	400	550	450	**S801V36N3D**	
727	129	220	257	250	200	300	250	550	450	700	550	**S801V42N3D**	
865	150	257	300	250	250	300	250	600	550	750	700	**S801V50N3D**	
1125	200	355	425	400	300	400	300	750	700	900	750	**S801V65N3D**	
1246	—	—	—	—	—	—	—	—	—	—	—	**S801V72N3D**	
1471	—	—	—	—	—	—	—	—	—	—	—	**S801V85N3D**	
—	—	—	—	—	—	—	—	—	—	—	—	**S801V10N3D** ③	

① 15 sec. start, 300% inrush, 40°C, 1 start every 15 minutes. If these start parameters are exceeded, please refer to 290 mm V-Frame, 865A Inside-the-Delta Starter.
② U-Frame 500 Amp unit does not have IEC Certification.
③ For more information on optimum performance of the 1000A Frame Size V Inside-the-Delta S801, see Appendix C of MN03902009E.

Table 39-34. 25 Second Ramp, 4 Starts per Hour, 300% Current Limit @ 40°C Ambient

Max. Continuous Motor Line Current	Three-Phase Motor											Catalog Number	Price U.S. $
	kW Rating (50 Hertz)			hp Rating (60 Hertz)									
	230	380 – 400	440	200V		230V		460V		575V			
	Volt	Volt	Volt	1.0SF	1.15SF	1.0SF	1.15SF	1.0SF	1.15SF	1.0SF	1.15SF		
Frame Size N													
58	9	15	18.5	15	10	15	15	40	30	50	40	**S801N37N3D**	
108	15	30	33	30	25	30	30	60	60	100	75	**S801N66N3D**	
Frame Size R													
164	25	45	55	50	40	50	50	125	100	125	125	**S801R10N3D**	
206	33	63	63	60	50	60	50	125	125	150	150	**S801R13N3D**	
Frame Size T													
257	45	80	90	75	60	75	60	150	150	250	200	**S801T18N3D**	
365	63	110	132	100	100	125	100	250	250	300	250	**S801T24N3D**	
477	80	147	160	125	125	150	125	300	300	400	400	**S801T30N3D**	
Frame Size U													
554	90	160	185	150	125	200	150	400	300	450	400	**S801U36N3D**	
646	110	200	220	200	150	250	200	500	400	550	450	**S801U42N3D**	
796	140	250	280	250	200	250	250	550	500	700	600	**S801U50N3D** ④⑤	
Frame Size V													
554	90	160	185	150	125	200	150	400	300	450	400	**S801V36N3D**	
646	110	200	220	200	150	250	200	500	400	550	450	**S801V42N3D**	
796	140	250	280	250	200	250	250	550	500	700	600	**S801V50N3D**	
1055	185	315	375	400	250	300	300	800	700	900	750	**S801V65N3D**	
1176	200	375	445	—	300	400	300	900	800	900	900	**S801V72N3D**	
1358	—	—	—	—	—	—	—	—	—	—	—	**S801V85N3D**	
—	—	—	—	—	—	—	—	—	—	—	—	**S801V10N3D** ⑥	

④ 15 sec. start, 300% inrush, 40°C, 1 start every 15 minutes. If these start parameters are exceeded, please refer to 290 mm V-Frame, 796A Inside-the-Delta Starter.
⑤ U-Frame 500 Amp unit does not have IEC Certification.
⑥ For more information on optimum performance of the 1000A Frame Size V Inside-the-Delta S801, see Appendix C of MN03902009E.

Discount Symbol **1CD1**

Inside-the-Delta Standard Duty Ratings

Table 39-35. 15 Second Ramp, 4 Starts per Hour, 300% Current Limit @ 50°C Ambient

Max. Continuous Motor Line Current	Three-Phase Motor											Catalog Number	Price U.S. $
	kW Rating (50 Hertz)			hp Rating (60 Hertz)									
	230	380 – 400	440	200V		230V		460V		575V			
	Volt	Volt	Volt	1.0SF	1.15SF	1.0SF	1.15SF	1.0SF	1.15SF	1.0SF	1.15SF		
Frame Size N													
58	9	15	18.5	15	10	15	15	40	30	50	40	**S801N37N3D**	
108	15	30	33	30	25	30	30	60	60	100	75	**S801N66N3D**	
Frame Size R													
164	25	45	55	50	40	50	50	125	100	125	125	**S801R10N3D**	
206	33	63	63	60	50	60	60	125	125	150	150	**S801R13N3D**	
Frame Size T													
257	45	80	90	75	60	75	75	150	150	250	200	**S801T18N3D**	
365	63	110	132	100	100	125	100	250	250	300	250	**S801T24N3D**	
477	80	147	160	125	125	150	125	300	300	400	400	**S801T30N3D**	
Frame Size U													
554	90	160	185	150	125	200	150	400	300	450	400	**S801U36N3D**	
646	110	200	220	200	150	250	200	450	400	550	450	**S801U42N3D**	
796	140	250	280	250	200	250	250	550	450	700	600	**S801U50N3D** ①	
Frame Size V													
554	90	160	185	150	125	200	150	400	300	450	400	**S801V36N3D**	
646	110	200	220	200	150	250	200	450	400	550	450	**S801V42N3D**	
796	140	250	280	250	200	250	250	550	450	700	600	**S801V50N3D**	
1055	185	315	375	400	250	300	300	750	700	900	750	**S801V65N3D**	
1176	200	375	445	—	—	—	—	—	—	—	—	**S801V72N3D**	
1358	257	450	500	—	—	—	—	—	—	—	—	**S801V85N3D**	
—	—	—	—	—	—	—	—	—	—	—	—	**S801V10N3D** ②	

① U-Frame 500 Amp unit does not have IEC Certification.
② For more information on optimum performance of the 1000A Frame Size V Inside-the-Delta S801, see Appendix C of MN03902009E.

Table 39-36. 50 Second Ramp, 2 Starts per Hour, 300% Current Limit @ 50°C Ambient

Max. Continuous Motor Line Current	Three-Phase Motor											Catalog Number	Price U.S. $
	kW Rating (50 Hertz)			hp Rating (60 Hertz)									
	230	380 – 400	440	200V		230V		460V		575V			
	Volt	Volt	Volt	1.0SF	1.15SF	1.0SF	1.15SF	1.0SF	1.15SF	1.0SF	1.15SF		
Frame Size N													
36	5.5	10	11	7-1/2	7-1/2	7-1/2	7-1/2	25	15	25	25	**S801N37N3D**	
73	11	18.5	22	15	15	25	15	50	40	60	50	**S801N66N3D**	
Frame Size R													
103	15	30	33	25	25	30	25	60	60	75	75	**S801R10N3D**	
138	22	40	45	40	30	50	40	100	75	125	100	**S801R13N3D**	
Frame Size T													
199	33	59	63	50	50	60	50	125	125	150	150	**S801T18N3D**	
257	45	80	90	75	60	75	75	150	150	250	200	**S801T24N3D**	
324	55	100	110	100	75	100	100	250	200	300	250	**S801T30N3D**	
Frame Size U													
485	80	150	160	125	125	150	125	300	300	400	400	**S801U36N3D**	
580	100	180	200	150	150	200	150	400	300	550	450	**S801U42N3D**	
646	110	200	220	200	150	250	200	450	400	550	450	**S801U50N3D** ③	
Frame Size V													
485	80	150	160	125	125	150	125	300	300	400	400	**S801V36N3D**	
580	100	180	200	150	150	200	150	400	300	550	450	**S801V42N3D**	
646	110	200	220	200	150	250	200	450	400	550	450	**S801V50N3D**	
727	129	220	257	250	200	250	250	550	500	700	550	**S801V65N3D**	
816	147	257	295	250	250	300	250	600	550	750	700	**S801V72N3D**	
1021	180	315	375	300	250	300	300	750	600	900	750	**S801V85N3D**	
—	—	—	—	—	—	—	—	—	—	—	—	**S801V10N3D** ④	

③ U-Frame 500 Amp unit does not have IEC Certification.
④ For more information on optimum performance of the 1000A Frame Size V Inside-the-Delta S801, see Appendix C of MN03902009E.

Discount Symbol **1CD1**

Inside-the-Delta Standard Duty Ratings

Table 39-37. 15 Second Ramp, 4 Starts per Hour, 450% Current Limit @ 40°C Ambient

Max. Continuous Motor Line Current	Three-Phase Motor											Catalog Number	Price U.S. $
	kW Rating (50 Hertz)			hp Rating (60 Hertz)									
	230	380 – 400	440	200V		230V		460V		575V			
	Volt	Volt	Volt	1.0SF	1.15SF	1.0SF	1.15SF	1.0SF	1.15SF	1.0SF	1.15SF		
Frame Size N													
47	7.5	12.5	15	10	10	15	10	30	25	40	30	**S801N37N3D**	
83	12.5	22	25	25	15	25	25	50	50	60	60	**S801N66N3D**	
Frame Size R													
126	18.5	37	40	30	30	40	30	75	60	100	100	**S801R10N3D**	
162	25	45	55	50	40	50	50	100	100	125	125	**S801R13N3D**	
Frame Size T													
266	45	80	90	75	60	100	75	150	150	250	200	**S801T18N3D**	
379	63	110	132	100	100	125	100	250	250	300	250	**S801T24N3D**	
485	80	150	160	125	125	150	125	300	300	400	400	**S801T30N3D**	
Frame Size U													
580	100	185	200	150	150	200	150	400	300	550	450	**S801U36N3D**	
695	110	200	250	200	150	250	200	450	400	600	550	**S801U42N3D**	
798	140	250	280	250	200	250	250	550	450	700	600	**S801U50N3D** ①	
Frame Size V													
580	100	185	200	150	150	200	150	400	300	550	450	**S801V36N3D**	
695	110	200	250	200	150	250	200	450	400	600	550	**S801V42N3D**	
798	140	250	280	250	200	250	250	550	450	700	600	**S801V50N3D**	
908	160	280	335	250	250	300	250	700	550	750	700	**S801V65N3D**	
1021	—	—	—	—	—	—	—	—	—	—	—	**S801V72N3D**	
1125	—	—	—	—	—	—	—	—	—	—	—	**S801V85N3D**	

① U-Frame 500 Amp unit does not have IEC Certification.

Table 39-38. 30 Second Ramp, 4 Starts per Hour, 450% Current Limit @ 40°C Ambient

Max. Continuous Motor Line Current	Three-Phase Motor											Catalog Number	Price U.S. $
	kW Rating (50 Hertz)			hp Rating (60 Hertz)									
	230	380 – 400	440	200V		230V		460V		575V			
	Volt	Volt	Volt	1.0SF	1.15SF	1.0SF	1.15SF	1.0SF	1.15SF	1.0SF	1.15SF		
Frame Size N													
36	5.5	10	12.5	7-1/2	7-1/2	7-1/2	7-1/2	25	15	25	25	**S801N37N3D**	
69	11	18.5	22	15	15	15	15	50	40	50	50	**S801N66N3D**	
Frame Size R													
96	15	25	30	25	25	30	25	60	50	75	60	**S801R10N3D**	
130	22	37	45	30	30	40	30	75	75	100	100	**S801R13N3D**	
Frame Size T													
257	45	80	90	75	60	75	75	150	150	250	200	**S801T18N3D**	
365	63	110	132	100	100	125	100	250	250	300	250	**S801T24N3D**	
448	80	140	160	125	125	150	125	300	250	400	300	**S801T30N3D**	
Frame Size U													
503	90	160	185	150	125	150	150	300	300	450	400	**S801U36N3D**	
580	100	180	200	150	150	200	150	400	300	550	450	**S801U42N3D**	
646	110	200	220	200	150	250	200	450	400	550	450	**S801U50N3D** ②	
Frame Size V													
503	90	160	185	150	125	150	150	300	300	450	400	**S801V36N3D**	
580	100	180	200	150	150	200	150	400	300	550	450	**S801V42N3D**	
646	110	200	220	200	150	250	200	450	400	550	450	**S801V50N3D**	
727	129	220	257	250	200	250	250	550	450	700	550	**S801V65N3D**	
796	—	—	—	—	—	—	—	—	—	—	—	**S801V72N3D**	
865	—	—	—	—	—	—	—	—	—	—	—	**S801V85N3D**	

② U-Frame 500 Amp unit does not have IEC Certification.

Discount Symbol **1CD1**

Inside-the-Delta Severe Duty Ratings

Severe Duty Ratings are defined as any combination of parameters that exceed the Standard Duty Ratings where the ramp time is over 30 seconds, the number of starts per hour exceeds 4, or the current limit set is over 300%.

Example: 35-Second Ramp, 5 Starts per Hour 350% Current Limit @ 40°C Ambient.

Table 39-39. Severe Duty Inside-the-Delta Ratings

Max. Continuous Motor Line Current	Three-Phase Motor											Catalog Number	Price U.S. $
	kW Rating (50 Hertz)			hp Rating (60 Hertz)									
	230	380 – 400	440	200V		230V		460V		575V			
	Volt	Volt	Volt	1.0SF	1.15SF	1.0SF	1.15SF	1.0SF	1.15SF	1.0SF	1.15SF		
Frame Size N													
39	5.5	10	11	7-1/2	7-1/2	10	7-1/2	25	15	30	25	**S801N37N3D**	
73	11	18.5	22	15	15	25	15	50	40	60	50	**S801N66N3D**	
Frame Size R													
111	15	30	33	25	25	30	25	75	60	75	75	**S801R10N3D**	
138	22	40	45	40	30	50	40	100	75	120	100	**S801R13N3D**	
Frame Size T													
199	33	59	63	50	50	60	50	125	125	150	150	**S801T18N3D**	
257	45	80	90	75	60	75	75	150	150	250	200	**S801T24N3D**	
324	55	100	110	100	75	100	100	250	200	300	250	**S801T30N3D**	
Frame Size U													
415	75	110	147	125	100	125	125	300	250	300	300	**S801U36N3D**	
526	90	160	185	150	120	150	150	400	300	450	400	**S801U42N3D**	
623	110	185	220	200	150	250	200	450	400	550	450	**S801U50N3D** ①	
Frame Size V													
415	75	110	147	125	100	125	125	300	250	300	300	**S801V36N3D**	
526	90	160	185	150	120	150	150	400	300	450	400	**S801V42N3D**	
623	110	185	220	200	150	250	200	450	400	550	450	**S801V50N3D**	
727	129	220	257	250	200	250	250	550	450	700	550	**S801V65N3D**	
816	147	257	295	250	250	300	250	600	550	750	700	**S801V72N3D**	
908	160	280	335	250	250	300	250	700	550	750	700	**S801V85N3D**	
—	—	—	—	—	—	—	—	—	—	—	—	**S801V10N3D** ②	

① U-Frame 500 Amp unit does not have IEC Certification.
② For more information on optimum performance of the 1000A Frame Size V Inside-the-Delta S801, see Appendix C of MN03902009E.

Discount Symbol **1CD1**

Options

Extended Ramp

For a longer ramp acceleration time of .5 – 360 seconds, change the last digit in the Catalog Number from **Page 39-25** to **L**.

Table 39-40. Extended Ramp Option

Frame Size	Max. Current	Catalog Number	Price U.S. $
N	37 66	**S801N37N3L** **S801N66N3L**	
R	105 135	**S801R10N3L** **S801R13N3L**	
T	180 240 304	**S801T18N3L** **S801T24N3L** **S801T30N3L**	
U	360 420 500	**S801U36N3L** **S801U42N3L** **S801U50N3L** ①	
V	360 420 500 650	**S801V36N3L** **S801V42N3L** **S801V50N3L** **S801V65N3L**	
	720 850 1000	**S801V72N3L** **S801V85N3L** **S801V10N3L**	

① U-Frame 500 Amp unit does not have IEC Certification.

Extended Ramp and 690V Option

For voltage ratings of 690V, use the table below.

Table 39-41. 690V Option

Frame Size	Max. Current	Catalog Number	Price U.S. $
T	180 240 304	**S801T18V3L** **S801T24V3L** **S801T30V3L**	
V	360 420 500	**S801V36V3L** **S801V42V3L** **S801V50V3L**	
	650 720 850	**S801V65V3L** **S801V72V3L** **S801V85V3L**	

Pump Control

For pump control option, use the following table to select the product you are looking for. For sizing information, use the tables on **Pages 39-25** to **39-30**.

Table 39-42. Pump Control Option

Frame Size	Max. Current	Catalog Number	Price U.S. $
N	37 66	**S801N37P3S** **S801N66P3S**	
R	105 135	**S801R10P3S** **S801R13P3S**	
T	180 240 304	**S801T18P3S** **S801T24P3S** **S801T30P3S**	
U	360 420 500	**S801U36P3S** **S801U42P3S** **S801U50P3S** ②	
V	360 420 500 650	**S801V36P3S** **S801V42P3S** **S801V50P3S** **S801V65P3S**	
	720 850 1000	**S801V72P3S** **S801V85P3S** **S801V10P3S**	

② U-Frame 500 Amp unit does not have IEC Certification.

Accessories

Surge Suppressors

The surge suppressor can mount on either the line or load side of the ***IT.*** Soft Starter. It is designed to clip the line voltage (or load side induced voltage).

Table 39-43. Surge Suppressors

Description	Catalog Number	Price U.S. $
600V MOV for 200 mm and 290 mm units	**EMS39**	
690V MOV for 200 mm ③ and 290 mm units	**EMS41**	

③ T-Frame only.

Surge Suppressor

Surge Suppressor Mounted on a 200 mm Device

Discount Symbol **1-CD1**

Lug Kits

The 200 mm and 290 mm soft starters each have different lug options based on your wiring needs. Each lug kit contains three lugs which can be mounted on either the load or line side.

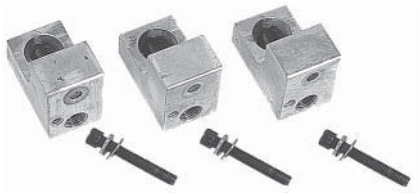

Lug Kits — EML23

Table 39-44. Lug Kits

Frame Size	Frame Designation	Description	Catalog Number	Price U.S. $
200 mm SSRV	T, U	2 cable connections, 4 AWG to 1/0 cable 1 cable connection, 4/0 to 500 MCM cable 2 cable connections, 4/0 to 500 MCM cable 1 cable connection, 2/0 to 300 MCM cable 2 cable connections, 2/0 to 300 MCM cable	**EML22** **EML23** **EML24** **EML25** **EML26**	
290 mm SSRV	V	2 cable connections, 4/0 to 500 MCM cable 4 cable connections, 4/0 to 500 MCM cable 6 cable connections, 4/0 to 500 MCM cable 4 cable connections, 2/0 to 300 MCM cable	**EML28** **EML30** **EML32** **EML33** ①	

① The EML33 does not have a CSA Listing.

Lug Cover Kits

Replacement covers for the T and V frame are available in case of damage to the existing covers.

Table 39-45. Lug Cover Kits

Description	Catalog Number	Price U.S.$
Lug Cover T, U Frame	**EML27**	
Lug Cover V Frame	**EML34**	

Control Interface Module

The Control Interface Module (CIM) is available as a replacement part in two versions.

Table 39-46. CIM

Description	Catalog Number	Price U.S. $
Blank Cover (Filler)	**EMA68**	
CIM for Standard Unit	**EMA71**	
CIM for Pump Control Option	**EMA72**	
Panel Mounting Kit — 3 ft. Cable 5 ft. Cable 8 ft. Cable 10 ft. Cable	 **EMA69A** **EMA69B** **EMA69C** **EMA69D**	

Control Wire Connector

Table 39-47. Control Wire Connector

Description	Catalog Number	Price U.S.$
12 pin, 5 mm pitch Connector for Control Wiring	**EMA75**	

User Manual

A comprehensive User Manual is available and can be downloaded free of charge from www.eaton.com by performing a document search for MN03902008E. The Inside-the-Delta User Manual can be found by searching for Pub. No. MN03902009E.

Sales Demo Kit

A Demo Kit is available for use in customer presentations. It comes in a solid, lightweight carry case for easy use. The kit includes the following items:

- S801N66N3S — 65 Amp Soft Starter or S801R13N35
- PSS55A — 55 Watt Power Supply
- *IT.* Soft Starter brochure
- Cutout pictures of the four frame sizes
- Family photo

Table 39-48. Sales Demo Kits

Description	Catalog Number	Price U.S. $
Functional Kits		
S801N66N3S	**S801DEMOW**	
S801R13N3S	**S801RDEMOW**	

Mounting Plates

The Mounting Plates are designed to help make it easy to install or retrofit the soft starter into enclosures and MCCs. The soft starter can be mounted onto the plate prior to installation. The mounting plate is designed with tear drop mounting holes for easier installation.

Table 39-49. Mounting Plates

Description	Catalog Number	Price U.S.$
Mounting Plate N Frame	**EMM13N**	
Mounting Plate R Frame	**EMM13R**	
Mounting Plate T, U Frame	**EMM13T**	
Mounting Plate V Frame	**EMM13V**	
Fan/Hood Accessory	**EMM18**	

Adapter Plates

The Adapter Plate allows customers to retrofit a V-Frame 290 mm Soft Starter with the U-Frame 200 mm Soft Starter.

Table 39-50. Adapter Plates

Description	Catalog Number	Price U.S.$
Adapter Plates ②	**EMM13U**	

② For more information see Pub51719.

Vibration Plates

The Vibration Plates allow the soft starter to be applied in high shock and vibration applications. The vibration plate allows vibration up to 5g and shock in up to 40g. The soft starter is mounted onto the vibration plate prior to installation in the panel.

Table 39-51. Vibration Plates

Description	Catalog Number	Price U.S.$
Vibration Plate N Frame	**EMM14N**	
Vibration Plate R Frame	**EMM14R**	
Vibration Plate T, U Frame	**EMM14T**	
Vibration Plate V Frame	**EMM14V**	

Power Supplies

24V DC Power Supply which can be used with the S801 SSRV or as a stand-alone device.

Table 39-52. Power Supplies

Description	Catalog Number	Price U.S. $
115V AC Input 24V DC Output	**PSS55A**	
230V AC Input 24V DC Output	**PSS55B**	
380 – 480V AC Input 24V DC Output	**PSS55C**	

DIN Rail Power Supply Mounting Kit (35 mm)

Table 39-53. DIN Rail Mounting Kit

Description	Catalog Number	Price U.S. $
DIN Rail Mounting Kit (35 mm)	**PSSDIN**	

Discount Symbol **1-CD1**

Standards and Certifications

- IEC 947 compliant
- EN 60947-4-2
- CSA Certification
- cUL$_{US}$ Listed (File # E202571)
- CE marked

Technical Data and Specifications

Table 39-54. Specifications— *IT.* Soft Starter

Soft Starter (Partial Catalog Number)	S801 N37	S801 N66	S801 R10	S801 R13	S801 T18	S801 T24	S801 T30	S801 U36	S801 U42	S801 U50 ①	S801 V36	S801 V42	S801 V50	S801 V65	S801 V72	S801 V85	S801 V10 ②
Max. Current Capacity	37	66	105	135	180	240	304	360	420	500	360	420	500	650	720	850	1000
Dimensions																	
Width in Inches (mm)	2.60 (66.0)		4.37 (111.0)		7.65 (194.4)			7.73 (196.3)			11.03 (280.2)						
Height in Inches (mm)	7.38 (187.4)		7.92 (201.1)		12.71 (322.9)			12.72 (323.1)			16.57 (420.8)						
Depth in Inches (mm)	6.63 (168.4)		7.03 (178.6)		6.69 (169.8)			7.08 (179.9)			7.23 (183.7)						
Weight in lbs. (kg)	5.8 (2.6)		10.5 (4.8)		48 (21.8) w/Lugs 41 (18.6) w/o Lugs			48 (21.8) w/Lugs 41 (18.6) w/o Lugs			103 (46.8) w/Lugs 91 (41.4) w/o Lugs						
General Information																	
Bypass Mechanical Lifespan	10M																
Insulating Voltage Ui	660V																
Ramp Time Range	.5 – 180 Seconds (.5 – 360 Seconds Extended Ramp)																
Resistance to Vibration	3g																
Resistance to Shock	15g																
Electrical Information																	
Operating Voltage	200 – 600V																
Operating Frequency	47 – 63 Hz																
Overload Setting	30 – 100%																
Trip Class	5, 10, 20, & 30																
Cabling Capacity (IEC 947)																	
Number of Conductors	1		1		1 or 2			1 or 2			2, 4 or 6						
Wire Sizes	14 – 2		14 – 4/0		4 AWG to 500 MCM			4 AWG to 500 MCM			2/0 to 500 MCM						
Type of Connectors	Box Lug				Add-On Lug Kit												
Control Wiring (12-Pin)																	
Wire Sizes in AWG	22 – 14																
Number of Conductors (Stranded)	2 (or one AWG 12)																
Torque Requirements in lb-in	3.5																
Solid, Stranded or Flexible Max. Size in mm^2	3.31																
Control Power Requirements																	
Voltage Range (24V ± 10%)	21.6 – 26.4																
Steady State Current Amps	1.0		1.0		1.0			1.0			1.4						
Inrush Current Amps	10		10		10			10			10						
Ripple	1%																
Relays (1) Class A and C																	
Voltage AC — maximum	240																
Voltage DC — maximum	120																
Amps — maximum	3																
Environment																	
Temperature — Operating	-30 – 50°C (No derating) Consult factory for operation > 50° C																
Temperature — Storage	-50 – 70°C																
Altitude	<2000 Meters — Consult factory for operation > 2000m																
Humidity	<95% Non-condensing																
Operating Position	Any																
Pollution degree IEC947-1	3																
Impulse withstand Voltage IEC947-4-1	6000V																

① U-Frame 500 Amp unit does not have IEC Certification.
② UL Recognized Component.

Dimensions

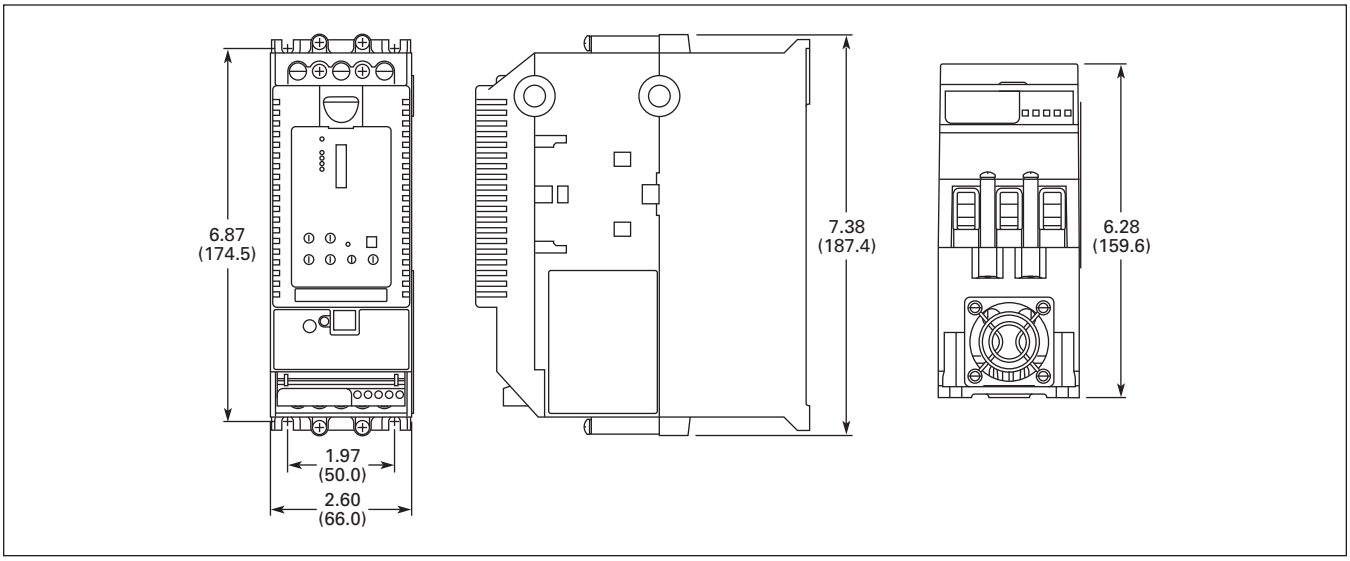

Figure 39-12. N-Frame (65 mm) S801 Approximate Dimensions in Inches (mm)

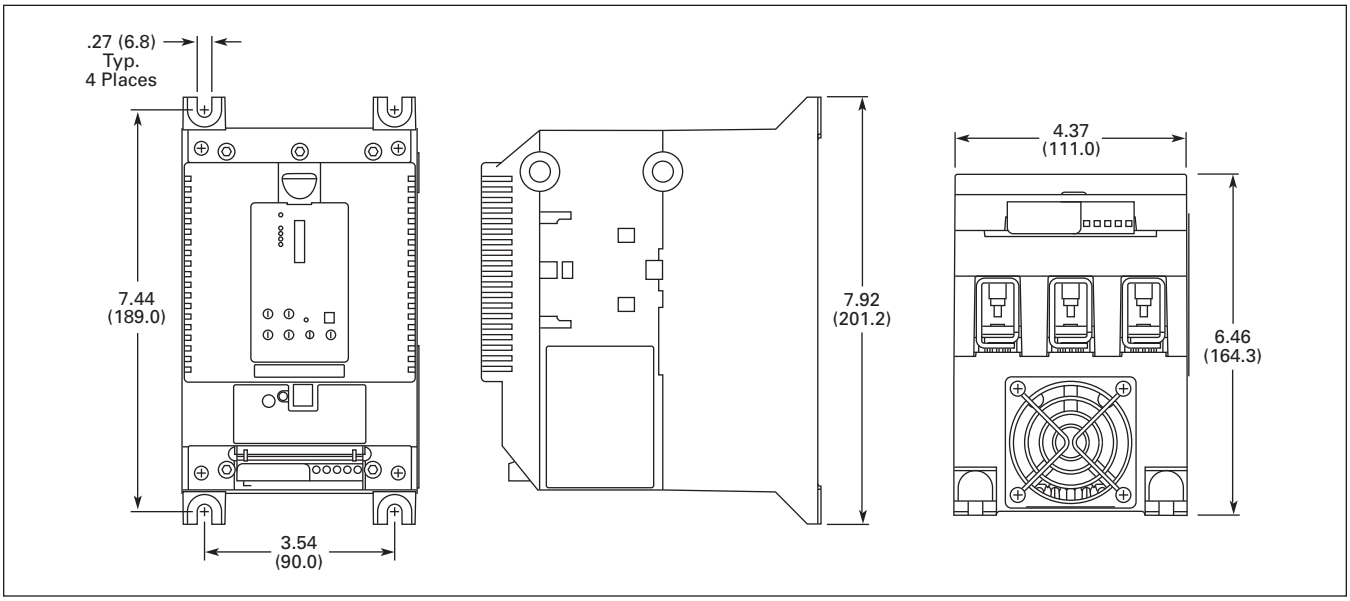

Figure 39-13. R-Frame (110 mm) S801 Approximate Dimensions in Inches (mm)

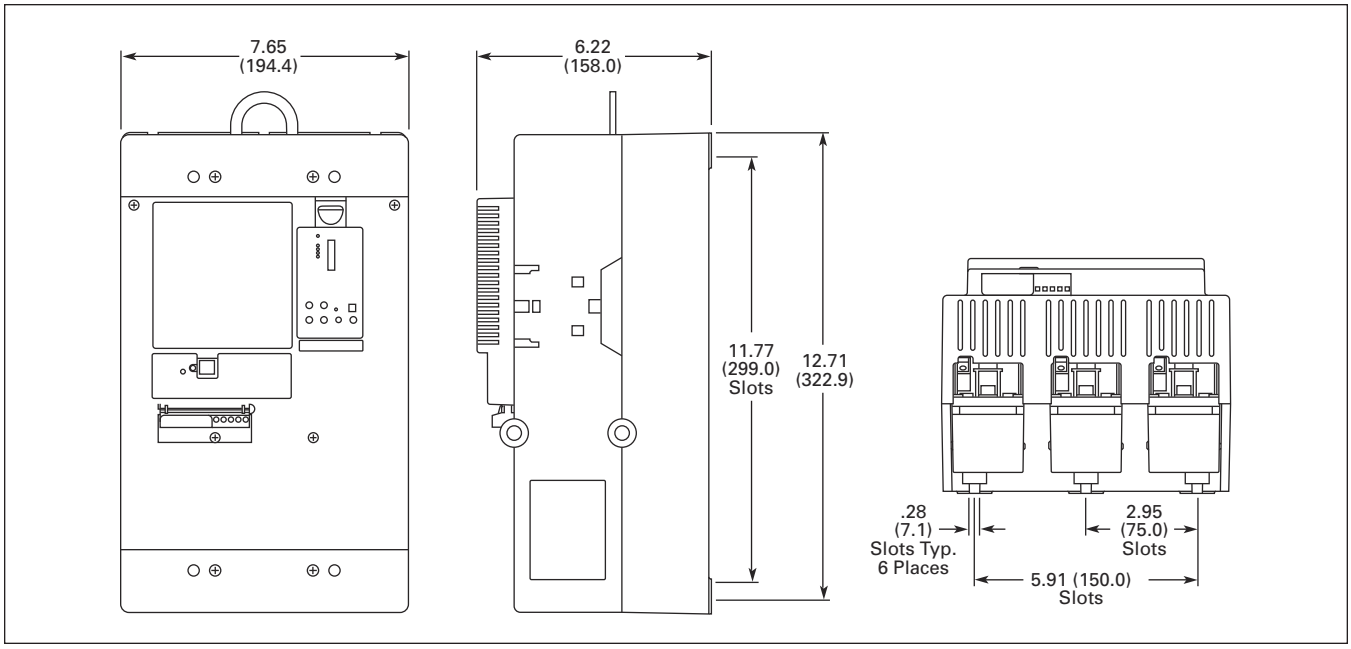

Figure 39-14. T-Frame (200 mm) S801 Approximate Dimensions in Inches (mm)

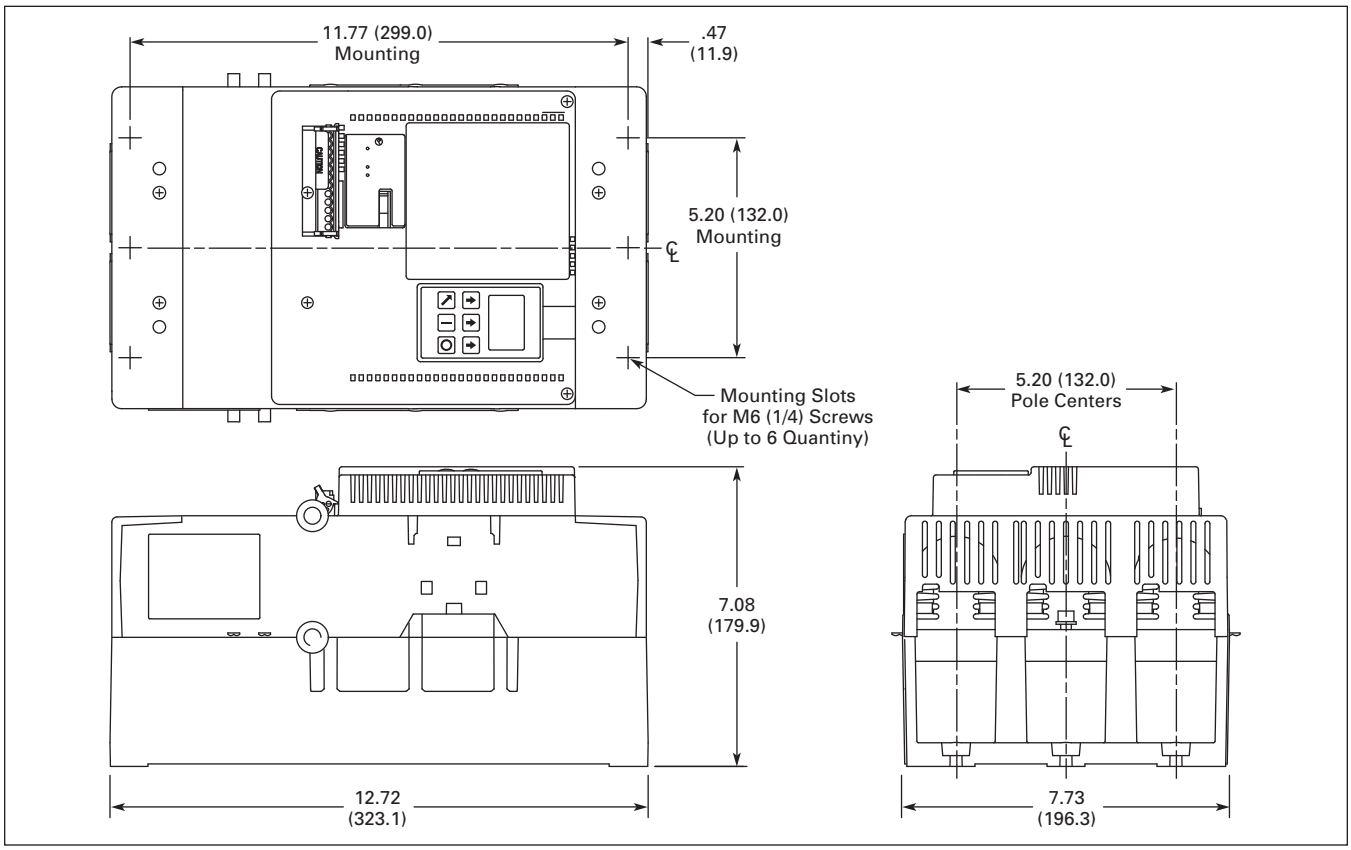

Figure 39-15. U-Frame (200 mm) S801 Approximate Dimensions in Inches (mm)

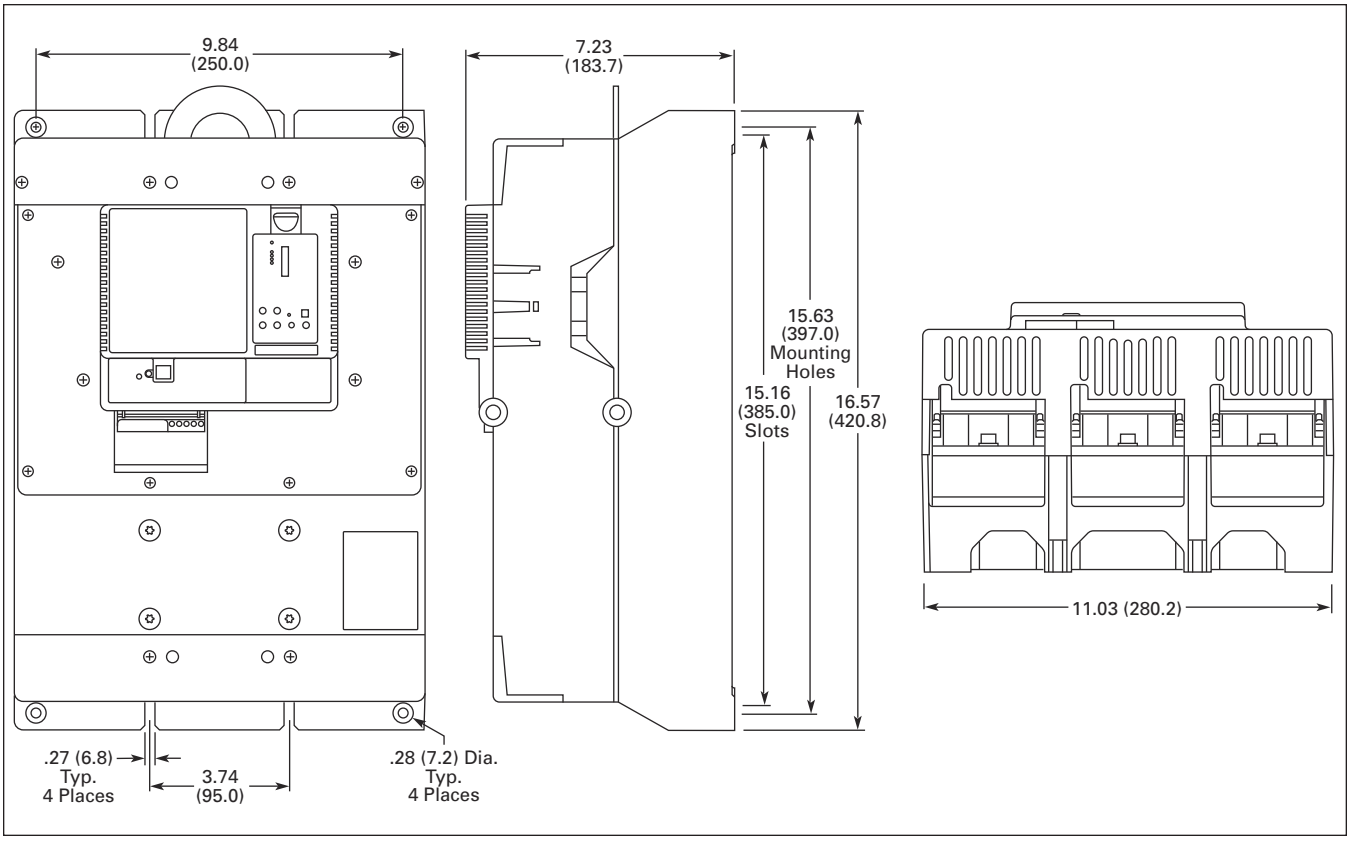

Figure 39-16. V-Frame (290 mm) S801 Approximate Dimensions in Inches (mm)

Contents

Description	*Page*
Type S811, Intelligent Technologies *(IT.)* Soft Starters with DIM	
Product Description	**39-37**
Application Description	**39-37**
Features and Benefits	**39-39**
Operation	**39-42**
Catalog Number Selection	**39-43**
Product Selection	**39-44**
Options	**39-54**
Accessories	**39-54**
Standards and Certifications	**39-55**
Instructional Leaflets	**39-55**
Technical Data and Specifications	**39-56**
Dimensions	**39-57**

S811 Open Soft Starter

Product Description

Eaton's Cutler-Hammer® ***IT.*** S801 revolutionized the reduced voltage control marketplace with its advanced feature set and small size. In fact, readers of an industry leading control publication rated Cutler-Hammer Soft Starters best in customer satisfaction in March 2004 and April 2006. The new ***IT.*** S811 from Eaton's electrical business offers all the popular features of the S801, but adds enhanced functionality with the new DIM (Digital Interface Module), communications, metering, monitoring and diagnostics capabilities.

The Cutler-Hammer Intelligent Technologies (***IT.***) Line of S811 Reduced Voltage Soft Starters is very compact, multi-functional, easy to install and easy to program. Designed to control the acceleration and deceleration of three-phase motors up to 690V, the line is available from 11 amps through 1,000 amps.

The S811 is designed to be a complete package combining the SCRs, bypass contactor and overload in one, very compact unit. The S811 is available as a component for panel mounting, in motor control centers or in enclosed control (NEMA Type 1, 3R, 4, 4X, 7/9 and 12).

Application Description

Designed to control the acceleration and deceleration of three-phase motors, the ***IT.*** S811 soft starter uses Silicon Controlled Rectifiers (SCRs) to control the voltage to soft start and soft stop the motor. After the motor is started, internal run bypass contactors close, resulting in the motor running directly across-the-line. The built-in solid-state overload protects the motor from overload conditions with sophisticated algorithms that model true motor heating, resulting in better motor protection and fewer nuisance trips. Advanced protective and diagnostic features reduce downtime.

A voltage ramp start or current limit start is available. Kick start is available in either starting mode. The soft stop option allows for a ramp stop time that is longer than the coast to stop time. The pump control option provides a smooth transition for starting and stopping a motor and eliminating the "water-hammer" effect that can damage pipes, valves and pumps.

The S811 offers an impressive array of advanced protective features. Not only are the protective features selectable, but many offer variable settings allowing the user to fine tune the starter to meet specific system requirements.

The S811 has an easy to use Digital Interface Module (DIM) that allows the user to configure the device and to read system parameters. The DIM includes an LCD display and keypad to scroll through the various menus. The DIM allows the user to modify control parameters, enable or disable protections, set communication variables, monitor system parameters such as line voltages and currents, and access the fault queue.

Figure 39-17. Digital Interface Module (DIM)

The DIM can be removed from the S811 and remote mounted. Kits are available to door mount the DIM, enabling users to safely configure, commission, monitor and troubleshoot the system at the electrical panel without opening the enclosure door. This will help eliminate the possibility of an arc flash incident.

Communications

The S811 has built-in communication capabilities through Cutler-Hammer QC (Quick Connect) Port. QCPort enables the soft starter to be connected to a variety of networks, including DeviceNet™, EtherNet/Modbus, EtherNet/IP and PROFIBUS. The advantage of QCPort is that multiple control components can be connected to one Cutler-Hammer ***IT.*** D77D gateway. The gateway concentrates data from the devices into a single node. Configuration is simple — a single press of the gateway's Auto Configuration button sets the system up for default operation. This automatically configures the I/O assemblies to the QCPort system devices. The data from these devices are then assembled into single input and output messages.

The S811 communication parameters can be configured with the DIM or through the fieldbus using CH Studio Component Manager. Advanced communication configuration settings provide the system integrator with powerful tools to facilitate system optimization.

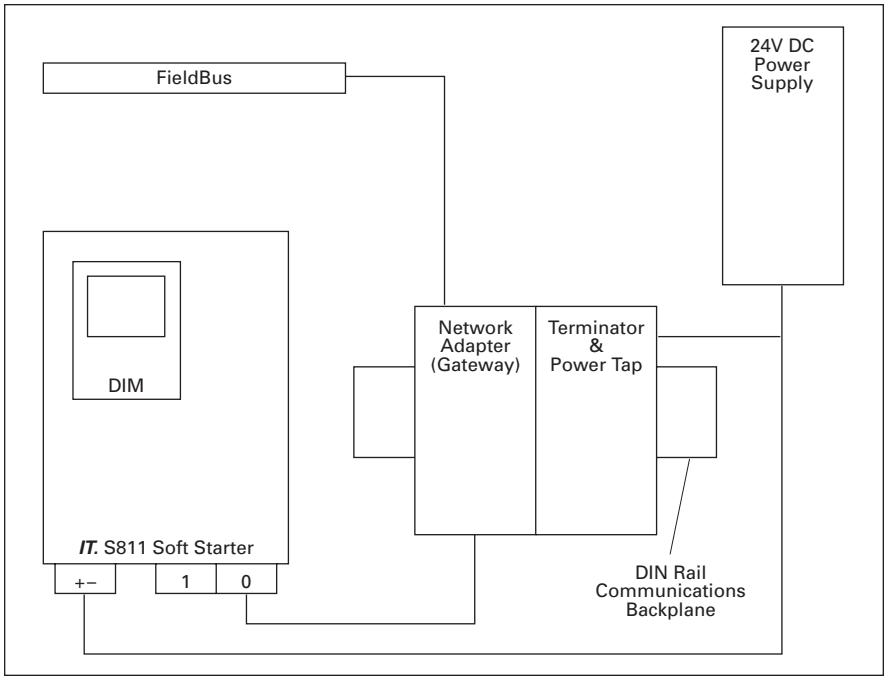

Figure 39-18. S811 Connection Diagram

Table 39-55. Communications Reference

Description	Part Number	Catalog Page
DeviceNet Network Adapter	**D77D-DNA**	**50-40**
EtherNet Modbus Network Adapter	**D77D-EMA**	**50-42**
EtherNet/IP Network Adapter	**D77D-EIP**	**50-44**
PROFIBUS Network Adapter	**D77D-PNA**	**50-46**
Terminator and Power Tap	**D77E-QPLR**	**50-35**
DIN Rail Communications Backplane, 7-position	**D77E-BP7**	**50-35**
DIN Rail Communications Backplane, 12-position	**D77E-BP12**	**50-35**
24V DC Power Supply (120V AC Input)	**PSS55A**	**44-65**
24V DC Power Supply (240V AC Input)	**PSS55B**	**44-65**
24V DC Power Supply (480V AC Input)	**PSS55C**	**44-65**

Features and Benefits

- The DIM (Digital Interface Module) provides an intuitive, easy-to-use human interface with powerful configuration capabilities to maximize system performance.
- Door or device mounted DIM enables users to safely configure, commission, monitor and troubleshoot the system at the electrical panel without opening the enclosure door, eliminating the possibility of an arc flash incident.
- System operating parameters can be monitored enterprise-wide through a communications network. Increase uptime by providing data for process management and preventive diagnostics.
- Run bypass mode greatly reduces internal heating created by the greater power dissipation in the SCRs. Bypass contactor directly connects the motor to the line and improves system efficiency by reducing internal power losses.
- Internal solid-state overload protection provides accurate current measurement and trip settings. Sophisticated algorithms solve a series of differential equations that model true motor heating and cooling, resulting in superior motor overload protection while minimizing nuisance trips. Advanced selectable protective features safeguard the motor and system against a variety of system faults.
- Internal run bypass contactors and overload protection eliminate the need for additional devices, reducing enclosure sizes, minimizing installation and wiring time and reducing overall assembly size and cost.
- Wide range of overload FLA settings (31 – 100% of rated current) and a selectable trip class (5 – 30) offers users the flexibility to fine tune the starter to match specific application requirements.
- Variable ramp times and torque control settings provide unlimited starting configurations, allowing for maximum application flexibility.
- Kick-start feature enables soft starting of high friction loads.
- Soft stop control for applications where an abrupt stop of the load is not acceptable.
- Pump control option with sophisticated pump algorithms on both starting and stopping that minimize the pressure surges that cause water hammer. The pump control option will maximize the life of the pump and piping systems while minimizing the downtime caused by system failure.
- Six SCRs control all three motor phases, providing smooth acceleration and deceleration performance.
- Soft acceleration and deceleration reduces wear on belts, gears, chains, clutches, shafts and bearings.
- Reduce the peak inrush current's stress on the power system.
- Minimize peak starting torque to diminish mechanical system wear and damage.
- 24V DC control module enhances personnel and equipment safety.
- Removable, lockable control terminal block reduces maintenance costs. Also provides the opportunity for OEMs to reduce assembly and test costs by utilizing pre-assembled wire harnesses.

Protective Features

All protective features can be configured, enabled or disabled with the DIM or through the communications network.

Motor Overload

The S811 includes electronic overload protection as standard. The overload meets applicable requirements for a motor overload protective device. The overload protects the motor from over heat conditions with the use of sophisticated algorithms that model true motor heating, resulting in superior motor protection and fewer nuisance trips.

The S811 calculates a thermal memory value. A 100% value represents the maximum safe temperature of the motor. When the thermal memory value reaches 100%, an overload trip will occur removing power to the motor. Upon trip, the S811 stores the calculated motor heating value and will not allow a motor re-start until the motor has sufficiently cooled. This feature ensures the motor will not be damaged by repeated overload trip, reset and re-start cycles.

The thermal memory value can be monitored through the DIM or the communications network. The thermal memory value can be of great use in determining an impending overload trip condition. Alarms can be implemented in the process monitoring system warning of an impending trip before a trip occurs halting the process. Costly system downtime can be avoided.

The trip current is adjusted to match the specific application requirements by entering the motor nameplate full load current rating and trip class. The FLA adjustment includes a 3 to 1 adjustment range. The overload trip class is adjustable from class 5 through class 30. The overload is ambient temperature compensated — meaning its trip characteristics will not vary with changes in ambient temperature. The overload protection can be enabled, disabled, or disabled on start.

Short Circuit

The use of a short circuit protective device in coordination with the S811 is required in branch motor circuits by most electrical codes. Short circuit coordination ratings with both fuses and Cutler-Hammer molded case circuit breakers are available providing customers with design flexibility. The S811 has short circuit coordination ratings as an open component, an enclosed starter, and in a motor control center.

Jam

Excessive current and torque up to locked rotor levels can occur in a jam condition. The condition can result in stress and damage to the motor, load, mechanical system, and the electrical distribution system. Jam protection prevents the stress and damage from a jam during normal run. After the motor is started, a current greater than 300% FLA setting will cause the starter to trip on a jam fault.

Stall

Excessive current and torque up to locked rotor levels can occur in a stall condition. The condition can lead to an overload trip and result in stress and damage to the motor, load, mechanical system, and the electrical distribution system. Stall protection prevents stress and damage to a motor that has not come up to speed, or stalled after the soft start time. The S811 will trip to protect the system in the event that the motor did not get to the rated speed in the defined soft start period. A current greater than 200% FLA at the end of the soft start period will cause the starter to trip on a stall fault.

Pole Over Temperature

High ambient temperatures, extended ramp times and high duty cycle conditions may cause the S811 power pole conductors to reach a temperature that exceeds their thermal rating. The S811 is equipped with sensors that monitor the temperature of the power poles. Over temperature protection occurs if the device's thermal capacity is exceeded. The soft starter will trip in over temperature conditions, preventing device failure.

The device pole temperature value can be monitored through the DIM or the communications network. This feature can be of use in determining an impending over temperature trip condition. Alarms can be implemented in the process monitoring system warning of an impending trip before a trip occurs, halting the process. Costly system shutdown can be avoided.

Phase Loss

Loss of a phase can cause a significant increase in the current drawn in the remaining two phases. Phase loss can lead to motor damage before an eventual overload trip occurs. Phase loss is typically an indication of a failure in the electrical distribution system. The S811 will detect a phase loss and trip if any phase current drops below a preset value. The phase loss trip level is adjustable from 0% to 100% of the average of the other two phase levels with an adjustable trip delay of 0.1 to 60 seconds.

Phase Imbalance

Phase current or voltage imbalance can cause a significant increase in the current drawn in the remaining two phases. Phase imbalance can lead to motor damage before an eventual overload trip. Phase imbalance is typically an indication of a failure in the electrical distribution system or the motor. The S811 will detect both current and voltage phase imbalances and trip if any phase becomes imbalanced as compared to the average of the other two phases.

The phase current imbalance trip level is adjustable from 0% to 100% of the average of the current in the other two phases with an adjustable trip delay of 0.1 to 60 seconds.

The phase voltage imbalance trip level is adjustable from 0% to 100% of the average of the voltage in the other two phases with an adjustable trip delay of 0.1 to 60 seconds.

Reset Mode

The S811 can be set up for automatic or manual reset on trip. The manual reset mode requires the operator to physically press the RESET button located on the soft starter. The overload can be manually reset through the DIM or through the communications network. The overload can also be electrically reset by energizing a 24V DC input on the control terminal block.

The automatic reset mode allows the soft starter to be automatically reset as soon as the trip condition is no longer present. With the automatic reset mode, after the fault is no longer present, the motor will be restarted as soon as a valid start signal is present.

Phase Reversal

The S811 can determine if the proper line phase sequence is present by default. The device will trip if the line phase sequence is something other than A-B-C. The S811 can be configured to operate under reversed phase conditions (A-C-B).

Shorted SCR Detection

The S811 monitors the operation of the power poles and will trip under a shorted SCR condition.

Open SCR Detection

The S811 monitors the operation of the power poles and will trip under an open SCR condition.

Low Current

Low current conditions can be a result of a loss of load or a failure in the mechanical system. The S811 has low current protection that will trip if the average RMS current falls below a preset value. The low current protection can be programmed as a percent of motor FLA from 0% to 100%.

Low Voltage

Low voltage conditions can result from disturbances in the electrical power distribution system. Low voltage conditions can cause a malfunction and damage to electrical equipment. The S811 has low voltage protection that will trip if the average RMS voltage falls below a preset value. The low voltage protection can be programmed as a percent of nominal voltage from 1% to 99% with a trip delay of 0.1 to 60 seconds.

High Voltage

High voltage conditions can result from disturbances in the electrical power distribution system. High voltage conditions can cause malfunctions or failures of electrical equipment. The S811 has high voltage protection that will trip if the average RMS voltage is greater than a preset value. The high voltage protection can be programmed as a percent of nominal voltage from 101% to 120% with a trip delay of 0.1 to 60 seconds.

Monitoring Capabilities

The S811 has an impressive array of system monitoring capabilities that allow users to access real time process and diagnostic data. This data can be viewed at the device with the DIM or through a communications network. Data over a communications network can provide valuable insight into the condition of the equipment and processes. Maintenance and production personnel can monitor critical operational and maintenance data from a central control station that can be located far away from the production facility. Process data can be monitored to determine system anomalies that may indicate a need for preventive maintenance or an impeding failure. Adjustments made through the communications network can reduce costs by minimizing the time traveling to the location where the motor controls are located. When faults do occur, real time fault data can assist maintenance in troubleshooting and planning repair resources. Remote reset signals can be given to tripped devices without the need for manual intervention by maintenance personnel.

Average Line Current

Provides the average of the three-phase RMS line currents in amps, accurate to within 2%. Current data can be used to indicate a need for maintenance. Increased currents in a fixed load application can indicate a reduction in system efficiencies and performance, signifying system maintenance is due.

Average Pole Current

Provides the average of the three-phase RMS pole currents in amps, accurate to within 2%. The pole current is the current through the soft starter. The line and pole current will be identical in in-line applications, and will differ in inside-the-delta applications.

Average line current as a % FLA

Provides the average RMS line current as a percentage of the S811 FLA setting.

Three-Phase Line Currents

Provides three RMS phase line currents in amps, accurate to within 2%. Imbalances or changes in the relative phase current to one another can indicate anomalies in the motor or electrical distribution system.

Three-Phase Pole Currents

Provides three RMS phase pole currents in amps, accurate to within 2%. The pole current is the current through the soft starter. The line and pole current will be identical in in-line applications, and will differ in inside-the-delta applications.

Three-Phase Line Voltages

Provides the individual RMS three-phase line voltages. Imbalances or changes in the relative phase voltage to one another can indicate anomalies in the motor or electrical distribution system. Voltage can be used to monitor electrical distribution system performance. Warnings, alarms and system actions to low or high voltage conditions can be implemented.

Percent Thermal Memory

Provides the real time calculated thermal memory value. The S811 calculates thermal memory value. A 100% value represents the maximum safe temperature of the motor. When the thermal memory value reaches 100%, an overload trip will occur, removing power to the motor.

The thermal memory value can be of great use in determining an impending overload trip condition. Alarms can be implemented in the process monitoring system warning of an impending trip before a trip occurs, halting the process. Costly system downtime can be avoided.

DC Control Voltage

Monitors level of the 24V DC control voltage. Fluctuations in control voltage can cause component malfunction and failure. System control voltage data can be used to implement warnings, alarms and system actions to low or high voltage conditions.

Pole Temperature

Increases in pole temperature are caused by increases in ambient temperature, start/stop times and start duty cycles. Changes in pole temperatures represent a change in system operating conditions. Identifying unexpected operating conditions or changes can prompt maintenance and aid in process evaluation activities.

Device Temperature

An increase in device temperature is a strong indication of an increase in ambient temperature. High ambient temperature operation can be identified with the Device Temperature data. Ambient temperature increases can be due to loss of enclosure cooling fans or blocked venting. High ambient temperatures will reduce the life of all electrical equipment in the enclosure.

Start Count

Start count data can be used to monitor system output, schedule preventative maintenance, identify system anomalies and identify changes in system operation.

Diagnostics

Fault Queue

Current fault and a fault queue containing the last nine system faults can be read through the DIM or communications network. Fault identification can minimize troubleshooting time and cost and prevent arc flash incidents. The fault queue can be remotely accessed through a communications network to assist in planning maintenance resources. 30 different faults can be identified by the S811.

Control Status

The S811 provides data that represents system conditions that can be read through the DIM or the communications network. This data identifies the status of the system and the control commands the system is requesting of the S811. This can be used for advanced troubleshooting and system integration activities.

Breaker Status

The S811 has provisions to read and display circuit breaker status. Cutler-Hammer communicating Cover Control or other communicating protective device is required to take advantage of this feature.

Operation

Starting and Stopping Modes

The S811 has a variety of starting and stopping methods to provide superior performance in the most demanding applications. The motor can be started in either Voltage Ramp Start or Current Limit Start mode. Kick Start and Soft Stop are available within both starting modes.

Voltage Ramp Start

Provides a voltage ramp to the motor resulting in a constant torque increase. The most commonly used form of soft start, this start mode allows you to set the initial torque value and the duration of the ramp to full voltage conditions. Bypass contactors close after ramp time.

- Adjustable initial torque 0 – 85% of locked rotor torque.
- Adjustable ramp time 0.5 – 180 seconds (can be extended with factory modification).

Current Limit Start

Limits the maximum current available to the motor during the start phase. This mode of soft starting is used when it becomes necessary to limit the maximum starting current due to long start times or to protect the motor. This start mode allows you to set the maximum starting current as a percentage of locked rotor current and the duration of the current limit. Bypass contactors close after current limit time.

- Maximum current of 0 – 85% locked rotor current.
- Adjustable ramp time 0.5 – 180 seconds (can be extended with factory modification).

Kick Start

Selectable feature in both Voltage Ramp Start and Current Limit Start modes. Provides a current and torque "kick" for 0 to 2.0 seconds. This provides greater initial current to develop additional torque to breakaway a high friction load.

- 0 – 85% of locked rotor torque
- 0 – 2.0 seconds duration

Soft Stop

Allows for a controlled stopping of a load. Used when a stop-time that is greater than the coast-to-stop time is desired. Often used with high friction loads where a sudden stop may cause system or load damage.

- Stop time = 0 – 60 seconds.

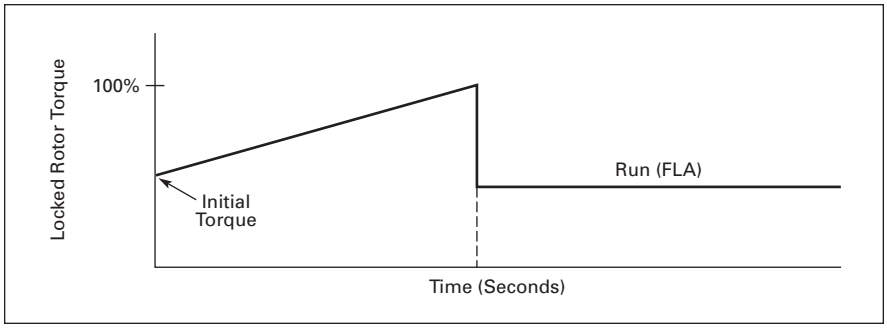

Figure 39-19. Starting Characteristics — Ramp Start

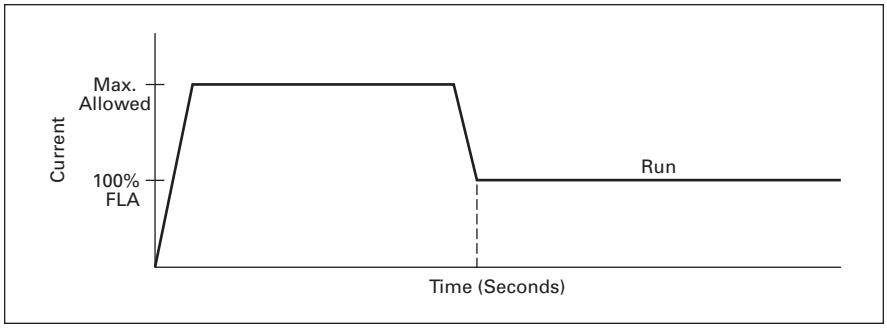

Figure 39-20. Starting Characteristics — Current Limit Start

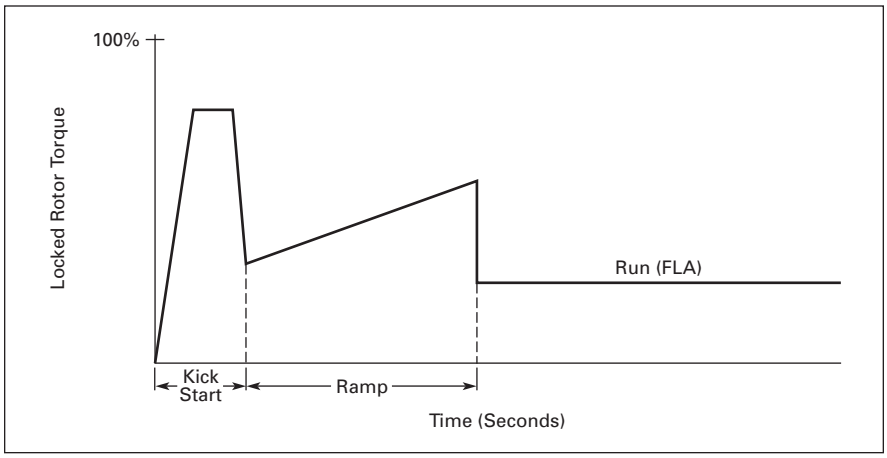

Figure 39-21. Starting Characteristics — Kick Start

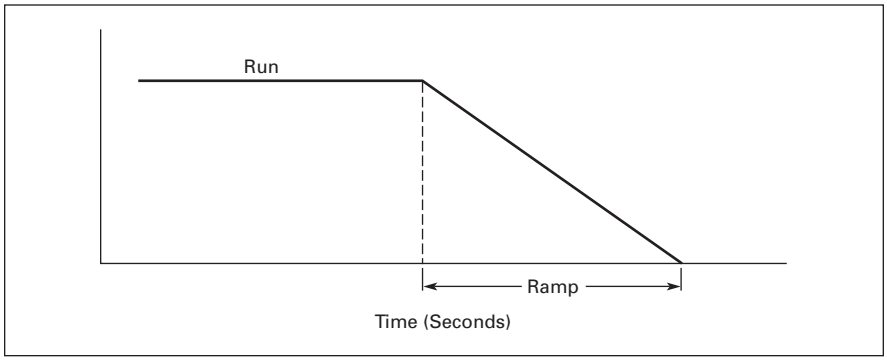

Figure 39-22. Starting Characteristics — Soft Stop

Catalog Number Selection

Table 39-56. S811 Open Soft Starters Catalog Numbering System

S 811 T 30 N 3 S

S = *IT.* Soft Starter

811 = Non-combination Soft Starter

Frame Size

N = 65 mm
R = 110 mm
T = 200 mm
U = 200 mm
V = 290 mm

Ampacity Rating

37 = 37 amps	**36** = 360 amps
66 = 66 amps	**42** = 420 amps
10 = 105 amps	**50** = 500 amps ②
13 = 135 amps	**65** = 650 amps
18 = 180 amps	**72** = 720 amps
24 = 240 amps	**85** = 850 amps
30 = 304 amps	**10** = 1000 amps

N = No Options
P = Pump Control
V = 690V Option (Frame T18 through V85) ①

3 = 3-Pole Device

S = Standard Soft Starter (Configurable for Edge or Level Control)
D = Inside-the-Delta
L = Extended Ramp Start
W = Without DIM

① Not available in U-Frame.
② U-Frame 500 Amp unit does not have IEC Certification.

Edge and Level Sensing Control

Edge Sensing

Edge sensing requires +24V DC power be momentarily applied to pin 1 (with terminal P at +24V DC) to initiate a start under all conditions. After a stop or fault occurs, the +24V DC must be removed, then reapplied to pin 1 before another start can occur. This control configuration should be used when restarting of the motor after a fault or stop must be supervised manually or as a part of a control scheme. The cycling of +24V DC power to terminal 1 before starting is required regardless of the position of the auto reset switch on the DIM.

Level Sensing

Level sensing will enable a motor to restart after a fault is cleared without cycling +24V DC power to terminal 1 as long as:

- Terminal P is supplied with +24V DC (to start from Terminal Block, Input #3 must also be enabled),
- The auto reset switch on the DIM is set to enabled,
- All faults have been reset.

This control configuration should be used where it is desirable to restart a motor after a fault without additional manual or automatic control. An example of this condition would be on a remote pumping station where it is desirable to automatically restart a pump after a power outage without operator intervention.

If the auto reset feature is used, CAUTION must be exercised to assure that any restart occurs in a safe manner.

Product Selection

Motor applications and customer needs come in many different varieties. With the standard and severe duty rating tables, we have attempted to provide guidelines on what the ***IT.*** Soft Starter is capable of. If the application falls under these categories, you can use these charts. For other applications, or when a question arises, consult with your local Eaton Representative or call our Technical Resource Center.

Standard Duty

Table 39-57. Standard Duty Ratings

Starting Method	Ramp Current % of FLA	Ramp Time Seconds	Starts per Hour	Ambient Temperature
vs. Soft Start	300%	30 sec.	3	50°C
vs. Full Voltage	500%	10 sec.	3	50°C
vs. Wye-Delta	350%	20 sec.	3	50°C
vs. 80% RVAT	480%	20 sec.	2	50°C
vs. 65% RVAT	390%	20 sec.	3	50°C
vs. 50% RVAT	300%	20 sec.	4	50°C

39

Table 39-58. Product Selection — 15 Second Ramp, 4 Starts per Hour, 300% Current Limit @ 40°C

Max. Current	Three-Phase Motors											Catalog Number	Price U.S. $
	kW Rating (50 Hz)			hp Rating (60 Hz)									
	230V	380 – 400V	440V	200V		230V		460V		575 – 690V			
				1.0SF	1.15SF	1.0SF	1.15SF	1.0SF	1.15SF	1.0SF	1.15SF		
Frame Size N													
37	10	18.5	18.5	10	10	10	10	25	20	30	30	**S811N37N3S**	
66	18.5	30	37	20	15	20	20	50	40	60	50	**S811N66N3S**	
Frame Size R													
105	30	55	59	30	25	40	30	75	60	100	75	**S811R10N3S**	
135	40	63	80	40	30	50	40	100	75	125	100	**S811R13N3S**	
Frame Size T													
180	51	90	110	60	50	60	60	150	125	150	150	**S811T18N3S**	
240	75	110	147	75	60	75	75	200	150	200	200	**S811T24N3S**	
304	90	160	185	100	75	100	100	250	200	300	250	**S811T30N3S**	
Frame Size U													
360	110	185	220	125	100	150	125	300	250	350	300	**S811U36N3S**	
420	129	220	257	150	125	175	150	350	300	450	350	**S811U42N3S**	
500	150	257	300	150	150	200	150	400	350	500	450	**S811U50N3S** ②	
Frame Size V													
360	110	185	220	125	100	150	125	300	250	350	300	**S811V36N3S**	
420	129	220	257	150	125	175	150	350	300	450	350	**S811V42N3S**	
500	150	257	300	150	150	200	150	400	350	500	450	**S811V50N3S**	
650	200	355	425	250	200	250	200	500	450	600	500	**S811V65N3S**	
720	220	400	450	—	—	300	250	600	500	700	600	**S811V72N3S**	
850	257	475	500	—	—	350	300	700	600	900	700	**S811V85N3S**	
1000	277	525	50	—	—	400	350	800	700	900	800	**S811V10N3S** ①	

① For more information on optimum performance of the 1000A Frame Size V S811, see Appendix E of MN03902002E.
② 500A rating does not have IEC certification.

Discount Symbol **1CD1**

Table 39-59. Product Selection — 25 Second Ramp, 4 Starts per Hour, 300% Current Limit @ 40°C

Max. Current	Three-Phase Motors											Catalog Number	Price U.S. $
	kW Rating (50 Hz)			hp Rating (60 Hz)									
	230V	380 – 400V	440V	200V		230V		460V		575 – 690V			
				1.0SF	1.15SF	1.0SF	1.15SF	1.0SF	1.15SF	1.0SF	1.15SF		
Frame Size N													
34	9	15	18.5	10	7-1/2	10	10	25	20	30	25	**S811N37N3S**	
63	15	30	33	20	15	20	20	40	40	60	50	**S811N66N3S**	
Frame Size R													
96	25	45	55	30	25	30	30	75	60	75	75	**S811R10N3S**	
120	33	63	63	40	30	40	40	75	75	100	100	**S811R13N3S**	
Frame Size T													
150	45	80	90	50	40	50	50	100	100	150	125	**S811T18N3S**	
215	63	110	132	60	60	75	60	150	150	200	150	**S811T24N3S**	
278	80	147	160	75	75	100	75	200	200	250	250	**S811T30N3S**	
Frame Size U													
320	90	160	185	100	75	125	100	250	200	300	250	**S811U36N3S**	
380	110	200	220	125	100	150	125	300	250	350	300	**S811U42N3S**	
460	140	250	280	150	125	150	150	350	300	450	400	**S811U50N3S** ②	
Frame Size V													
320	90	160	185	100	75	125	100	250	200	300	250	**S811V36N3S**	
380	110	200	220	125	100	150	125	300	250	350	300	**S811V42N3S**	
460	140	250	280	150	125	150	150	350	300	450	400	**S811V50N3S**	
610	185	315	375	250	150	200	200	500	450	600	500	**S811V65N3S**	
680	200	375	445	—	200	250	200	600	500	700	600	**S811V72N3S**	
810	250	450	500	—	—	300	300	700	600	900	700	**S811V85N3S**	
890	290	510	560	—	—	400	350	700	600	900	700	**S811V10N3S** ①	

① For more information on optimum performance of the 1000A Frame Size V S811, see Appendix E of MN03902002E.
② 500A rating does not have IEC certification.

Table 39-60. Product Selection — 15 Second Ramp, 4 Starts per Hour, 300% Current Limit @ 50°C

Max. Current	Three-Phase Motors											Catalog Number	Price U.S. $
	kW Rating (50 Hz)			hp Rating (60 Hz)									
	230V	380 – 400V	440V	200V		230V		460V		575 – 690V			
				1.0SF	1.15SF	1.0SF	1.15SF	1.0SF	1.15SF	1.0SF	1.15SF		
Frame Size N													
34	9	15	18.5	10	7-1/2	10	10	25	20	30	25	**S811N37N3S**	
63	15	30	33	20	15	20	20	40	40	60	50	**S811N66N3S**	
Frame Size R													
96	25	45	55	30	25	30	30	75	60	75	75	**S811R10N3S**	
120	33	63	63	40	30	40	40	75	75	100	100	**S811R13N3S**	
Frame Size T													
150	45	80	90	50	40	50	50	100	100	150	125	**S811T18N3S**	
215	63	110	132	60	60	75	60	150	150	200	150	**S811T24N3S**	
278	80	147	160	75	75	100	75	200	200	250	250	**S811T30N3S**	
Frame Size U													
320	90	160	185	100	75	125	100	250	200	300	250	**S811U36N3S**	
380	110	200	220	125	100	150	125	300	250	350	300	**S811U42N3S**	
460	140	250	280	150	125	150	150	350	300	450	400	**S811U50N3S** ③	
Frame Size V													
320	90	160	185	100	75	125	100	250	200	300	250	**S811V36N3S**	
380	110	200	220	125	100	150	125	300	250	350	300	**S811V42N3S**	
460	140	250	280	150	125	150	150	350	300	450	400	**S811V50N3S**	
610	185	315	375	250	150	200	200	500	450	600	500	**S811V65N3S**	
680	200	375	445	—	200	250	200	600	500	700	600	**S811V72N3S**	
830	257	450	500	—	—	300	300	700	600	900	700	**S811V85N3S**	
960	302	510	540	—	—	350	300	800	700	900	800	**S811V10N3S** ④	

③ 500A rating does not have IEC certification.
④ For more information on optimum performance of the 1000A Frame Size V S811, see Appendix E of MN03902002E.

Discount Symbol **1CD1**

Table 39-61. Product Selection — 50 Second Ramp, 2 Starts per Hour, 300% Current Limit @ 50°C

Max. Current	Three-Phase Motors											Catalog Number	Price U.S. $
	kW Rating (50 Hz)			hp Rating (60 Hz)									
	230V	380 – 400V	440V	200V		230V		460V		575 – 690V			
				1.0SF	1.15SF	1.0SF	1.15SF	1.0SF	1.15SF	1.0SF	1.15SF		
Frame Size N													
21	5.5	10	11	5	5	5	5	15	10	15	15	**S811N37N3S**	
42	11	18.5	22	10	10	15	10	30	25	40	30	**S811N66N3S**	
Frame Size R													
60	15	30	33	15	15	20	15	40	40	50	50	**S811R10N3S**	
80	22	40	45	25	20	30	25	60	50	75	60	**S811R13N3S**	
Frame Size T													
115	33	59	63	30	30	40	30	75	75	100	100	**S811T18N3S**	
150	45	80	90	50	40	50	50	100	100	150	125	**S811T24N3S**	
192	55	100	110	60	50	60	60	150	125	200	150	**S811T30N3S**	
Frame Size U													
280	80	150	160	75	75	100	75	200	200	250	250	**S811U36N3S**	
340	110	180	200	100	100	125	100	250	200	350	300	**S811U42N3S**	
380	110	200	220	125	100	150	125	300	250	350	300	**S811U50N3S** ②	
Frame Size V													
280	80	150	160	75	75	100	75	200	200	250	250	**S811V36N3S**	
340	110	180	200	100	100	125	100	250	200	350	300	**S811V42N3S**	
380	110	200	220	125	100	150	125	300	250	350	300	**S811V50N3S**	
420	129	220	257	150	125	150	150	350	300	450	350	**S811V65N3S**	
480	147	257	295	150	150	200	150	400	350	500	450	**S811V72N3S**	
590	180	315	375	200	150	200	200	500	400	600	500	**S811V85N3S**	
650	205	370	415	250	200	250	200	500	450	600	500	**S811V10N3S** ①	

① For more information on optimum performance of the 1000A Frame Size V S811, see Appendix E of MN03902002E.
② 500A rating does not have IEC certification.

Table 39-62. Product Selection — 15 Second Ramp, 4 Starts per Hour, 450% Current Limit @ 40°C

Max. Current	Three-Phase Motors											Catalog Number	Price U.S. $
	kW Rating (50 Hz)			hp Rating (60 Hz)									
	230V	380 – 400V	440V	200V		230V		460V		575 – 690V			
				1.0SF	1.15SF	1.0SF	1.15SF	1.0SF	1.15SF	1.0SF	1.15SF		
Frame Size N													
29	7.5	12.5	15	7-1/2	7-1/2	10	7-1/2	20	15	25	20	**S811N37N3S**	
49	12.5	22	25	15	10	15	15	30	30	40	40	**S811N66N3S**	
Frame Size R													
73	18.5	37	40	20	20	25	20	50	40	60	60	**S811R10N3S**	
94	25	45	55	30	25	30	30	60	60	75	75	**S811R13N3S**	
Frame Size T													
155	45	80	90	50	40	60	50	100	100	150	125	**S811T18N3S**	
219	63	110	132	60	60	75	60	150	150	200	150	**S811T24N3S**	
280	80	150	160	75	75	100	75	200	200	250	250	**S811T30N3S**	
Frame Size U													
345	100	185	200	100	100	125	100	250	200	350	300	**S811U36N3S**	
405	110	200	250	125	100	150	125	300	250	400	350	**S811U42N3S**	
Frame Size V													
345	100	185	200	100	100	125	100	250	200	350	300	**S811V36N3S**	
405	110	200	250	125	100	150	125	300	250	400	350	**S811V42N3S**	
465	140	250	280	150	125	150	150	350	300	450	400	**S811V50N3S**	
530	160	280	335	150	150	200	150	450	350	500	450	**S811V65N3S**	
590	180	315	375	200	150	—	200	500	400	600	500	**S811V72N3S**	
651	200	355	425	—	—	—	—	600	450	700	600	**S811V85N3S**	
754	220	400	465	—	—	—	—	600	500	800	700	**S811V10N3S** ③	

③ For more information on optimum performance of the 1000A Frame Size V S811, see Appendix E of MN03902002E.

Discount Symbol **1CD1**

Table 39-63. Product Selection — 30 Second Ramp, 4 Starts per Hour, 450% Current Limit @ 40°C

Max. Current	Three-Phase Motors											Catalog Number	Price U.S. $
	kW Rating (50 Hz)			hp Rating (60 Hz)									
	230V	380 – 400V	440V	200V		230V		460V		575 – 690V			
				1.0SF	1.15SF	1.0SF	1.15SF	1.0SF	1.15SF	1.0SF	1.15SF		
Frame Size N													
21	5.5	10	12.5	5	5	5	5	15	10	15	15	**S811N37N3S**	
40	11	18.5	22	10	10	10	10	30	25	30	30	**S811N66N3S**	
Frame Size R													
55	15	25	30	15	15	20	15	40	30	50	40	**S811R10N3S**	
75	22	37	45	20	20	25	20	50	50	60	60	**S811R13N3S**	
Frame Size T													
151	45	80	90	50	40	50	50	100	100	150	125	**S811T18N3S**	
215	63	110	132	60	60	75	60	150	150	200	150	**S811T24N3S**	
264	80	140	160	75	75	100	75	200	150	250	200	**S811T30N3S**	
Frame Size U													
300	90	160	185	100	75	100	100	200	200	300	250	**S811U36N3S**	
340	100	180	200	100	100	125	100	250	200	350	300	**S811U42N3S**	
Frame Size V													
300	90	160	185	100	75	100	100	200	200	300	250	**S811V36N3S**	
340	100	180	200	100	100	125	100	250	200	350	300	**S811V42N3S**	
380	110	200	220	125	100	150	125	300	250	350	300	**S811V50N3S**	
420	129	220	257	150	125	150	150	350	300	450	350	**S811V65N3S**	
460	140	250	280	150	125	150	150	350	300	450	400	**S811V72N3S**	
500	150	257	300	150	150	200	150	400	350	500	450	**S811V85N3S**	
560	160	277	325	200	150	250	200	500	400	600	500	**S811V10N3S** ①	

① For more information on optimum performance of the 1000A Frame Size V S811, see Appendix E of MN03902002E.

Discount Symbol **1CD1**

Severe Duty

Table 39-64. Severe Duty Ratings

Starting Method	Ramp Current % of FLA	Ramp Time Seconds	Starts per Hour	Ambient Temperature
vs. Soft Start	450%	30 sec.	4	50°C
vs. Full Voltage	500%	10 sec.	10	50°C
vs. Wye-Delta	350%	65 sec.	3	50°C
vs. 80% RVAT	480%	25 sec.	4	50°C
vs. 65% RVAT	390%	40 sec.	4	50°C
vs. 50% RVAT	300%	60 sec.	4	50°C

Table 39-65. Product Selection — > 30 Second Ramp, > 4 Starts per Hour or >300% Current Limit

Max. Current	Three-Phase Motors											Catalog Number	Price U.S. $
	kW Rating (50 Hz)			hp Rating (60 Hz)									
	230V	380 – 400V	440V	200V		230V		460V		575 – 690V			
				1.0SF	1.15SF	1.0SF	1.15SF	1.0SF	1.15SF	1.0SF	1.15SF		
Frame Size N													
22	5.5	10	11	5	5	7-1/2	5	15	10	20	15	**S811N37N3S**	
42	11	18.5	22	10	10	15	10	30	25	40	30	**S811N66N3S**	
Frame Size R													
65	15	30	33	15	15	20	15	50	40	50	50	**S811R10N3S**	
80	22	40	45	25	20	30	25	60	50	75	60	**S811R13N3S**	
Frame Size T													
115	33	59	63	30	30	40	30	75	75	100	100	**S811T18N3S**	
150	45	80	90	50	40	50	50	100	100	150	125	**S811T24N3S**	
192	55	100	110	60	50	75	60	150	125	200	150	**S811T30N3S**	
Frame Size U													
240	75	110	147	75	60	75	75	200	150	200	200	**S811U36N3S**	
305	90	160	185	100	75	100	100	250	200	300	250	**S811U42N3S**	
Frame Size V													
240	75	110	147	75	60	75	75	200	150	200	200	**S811V36N3S**	
305	90	160	185	100	75	100	100	250	200	300	250	**S811V42N3S**	
365	110	185	220	125	100	150	125	300	250	350	300	**S811V50N3S**	
420	129	220	257	150	125	150	150	350	300	450	350	**S811V65N3S**	
480	147	257	295	150	150	200	150	400	350	500	450	**S811V72N3S**	
525	160	280	335	150	150	200	150	450	350	500	450	**S811V85N3S**	
575	172	303	370	200	150	250	200	500	450	600	500	**S811V10N3S** ①	

① For more information on optimum performance of the 1000A Frame Size V S811, see Appendix E of MN03902002E.

Severe Duty Ratings are defined as any combination of parameters that exceed the Standard Duty Ratings where the ramp time is over 30 seconds, the number of starts per hour exceeds 4, or the current limit set is over 300%. *Example:* 35-Second Ramp, 5 Starts per Hour, 350% Current Limit @ 40°C Ambient.

Discount Symbol **1CD1**

Inside-the-Delta Standard Duty Ratings

Table 39-66. 15 Second Ramp, 4 Starts per Hour, 300% Current Limit @ 40°C Ambient

Max. Continuous Motor Line Current	Three-Phase Motor											Catalog Number	Price U.S. $
	kW Rating (50 Hertz)			hp Rating (60 Hertz)									
	230	380 – 400	440	200V		230V		460V		575V			
	Volt	Volt	Volt	1.0SF	1.15SF	1.0SF	1.15SF	1.0SF	1.15SF	1.0SF	1.15SF		
Frame Size N													
65	10	18.5	18.5	15	15	15	15	40	30	50	50	**S811N37N3D**	
114	18.5	30	37	30	25	30	30	75	60	100	75	**S811N66N3D**	
Frame Size R													
182	30	55	59	50	40	60	50	125	100	150	125	**S811R10N3D**	
234	40	63	80	60	50	75	60	150	125	200	150	**S811R13N3D**	
Frame Size T													
311	51	90	110	100	75	100	100	250	200	250	250	**S811T18N3D**	
415	75	110	147	125	100	125	125	300	250	300	300	**S811T24N3D**	
526	90	160	185	150	125	150	150	400	300	400	400	**S811T30N3D**	
Frame Size U													
623	110	185	220	200	150	250	200	450	400	550	450	**S811U36N3D**	
727	129	220	257	250	200	300	250	550	450	700	550	**S811U42N3D**	
865	150	257	300	250	250	300	250	600	550	750	700	**S811U50N3D** ①②	
Frame Size V													
623	110	185	220	200	150	250	200	450	400	550	450	**S811V36N3D**	
727	129	220	257	250	200	300	250	550	450	700	550	**S811V42N3D**	
865	150	257	300	250	250	300	250	600	550	750	700	**S811V50N3D**	
1125	200	355	425	400	300	400	300	750	700	900	750	**S811V65N3D**	
1246	—	—	—	—	—	—	—	—	—	—	—	**S811V72N3D**	
1471	—	—	—	—	—	—	—	—	—	—	—	**S811V85N3D**	
—	—	—	—	—	—	—	—	—	—	—	—	**S811V10N3D** ③	

① 15 sec. start, 300% inrush, 40°C, 1 start every 15 minutes. If these start parameters are exceeded, please refer to 290 mm V-Frame, 865A Inside-the-Delta Starter.
② U-Frame 500 Amp unit does not have IEC Certification.
③ For more information on optimum performance of the 1000A Frame Size V S811, see Appendix E of MN03902002E.

Table 39-67. 25 Second Ramp, 4 Starts per Hour, 300% Current Limit @ 40°C Ambient

Max. Continuous Motor Line Current	Three-Phase Motor											Catalog Number	Price U.S. $
	kW Rating (50 Hertz)			hp Rating (60 Hertz)									
	230	380 – 400	440	200V		230V		460V		575V			
	Volt	Volt	Volt	1.0SF	1.15SF	1.0SF	1.15SF	1.0SF	1.15SF	1.0SF	1.15SF		
Frame Size N													
58	9	15	18.5	15	10	15	15	40	30	50	40	**S811N37N3D**	
108	15	30	33	30	25	30	30	60	60	100	75	**S811N66N3D**	
Frame Size R													
164	25	45	55	50	40	50	50	125	100	125	125	**S811R10N3D**	
206	33	63	63	60	50	60	50	125	125	150	150	**S811R13N3D**	
Frame Size T													
257	45	80	90	75	60	75	60	150	150	250	200	**S811T18N3D**	
365	63	110	132	100	100	125	100	250	250	300	250	**S811T24N3D**	
477	80	147	160	125	125	150	125	300	300	400	400	**S811T30N3D**	
Frame Size U													
554	90	160	185	150	125	200	150	400	300	450	400	**S811U36N3D**	
646	110	200	220	200	150	250	200	500	400	550	450	**S811U42N3D**	
796	140	250	280	250	200	250	250	550	500	700	600	**S811U50N3D** ④⑤	
Frame Size V													
554	90	160	185	150	125	200	150	400	300	450	400	**S811V36N3D**	
646	110	200	220	200	150	250	200	500	400	550	450	**S811V42N3D**	
796	140	250	280	250	200	250	250	550	500	700	600	**S811V50N3D**	
1055	185	315	375	400	250	300	300	800	700	900	750	**S811V65N3D**	
1176	200	375	445	—	300	400	300	900	800	900	900	**S811V72N3D**	
1358	—	—	—	—	—	—	—	—	—	—	—	**S811V85N3D**	
—	—	—	—	—	—	—	—	—	—	—	—	**S811V10N3D** ⑥	

④ 15 sec. start, 300% inrush, 40°C, 1 start every 15 minutes. If these start parameters are exceeded, please refer to 290 mm V-Frame, 796A Inside-the-Delta Starter.
⑤ U-Frame 500 Amp unit does not have IEC Certification.
⑥ For more information on optimum performance of the 1000A Frame Size V S811, see Appendix E of MN03902002E.

Discount Symbol **1CD1**

Inside-the-Delta Standard Duty Ratings

Table 39-68. 15 Second Ramp, 4 Starts per Hour, 300% Current Limit @ 50°C Ambient

Max. Continuous Motor Line Current	Three-Phase Motor											Catalog Number	Price U.S. $
	kW Rating (50 Hertz)			hp Rating (60 Hertz)									
	230	380 – 400	440	200V		230V		460V		575V			
	Volt	Volt	Volt	1.0SF	1.15SF	1.0SF	1.15SF	1.0SF	1.15SF	1.0SF	1.15SF		
Frame Size N													
58	9	15	18.5	15	10	15	15	40	30	50	40	**S811N37N3D**	
108	15	30	33	30	25	30	30	60	60	100	75	**S811N66N3D**	
Frame Size R													
164	25	45	55	50	40	50	50	125	100	125	125	**S811R10N3D**	
206	33	63	63	60	50	60	60	125	125	150	150	**S811R13N3D**	
Frame Size T													
257	45	80	90	75	60	75	75	150	150	250	200	**S811T18N3D**	
365	63	110	132	100	100	125	100	250	250	300	250	**S811T24N3D**	
477	80	147	160	125	125	150	125	300	300	400	400	**S811T30N3D**	
Frame Size U													
554	90	160	185	150	125	200	150	400	300	450	400	**S811U36N3D**	
646	110	200	220	200	150	250	200	450	400	550	450	**S811U42N3D**	
796	140	250	280	250	200	250	250	550	450	700	600	**S811U50N3D** ①	
Frame Size V													
554	90	160	185	150	125	200	150	400	300	450	400	**S811V36N3D**	
646	110	200	220	200	150	250	200	450	400	550	450	**S811V42N3D**	
796	140	250	280	250	200	250	250	550	450	700	600	**S811V50N3D**	
1055	185	315	375	400	250	300	300	750	700	900	750	**S811V65N3D**	
1176	200	375	445	—	—	—	—	—	—	—	—	**S811V72N3D**	
1358	257	450	500	—	—	—	—	—	—	—	—	**S811V85N3D**	
—	—	—	—	—	—	—	—	—	—	—	—	**S811V10N3D** ②	

① U-Frame 500 Amp unit does not have IEC Certification.
② For more information on optimum performance of the 1000A Frame Size V S811, see Appendix E of MN03902002E.

Table 39-69. 50 Second Ramp, 2 Starts per Hour, 300% Current Limit @ 50°C Ambient

Max. Continuous Motor Line Current	Three-Phase Motor											Catalog Number	Price U.S. $
	kW Rating (50 Hertz)			hp Rating (60 Hertz)									
	230	380 – 400	440	200V		230V		460V		575V			
	Volt	Volt	Volt	1.0SF	1.15SF	1.0SF	1.15SF	1.0SF	1.15SF	1.0SF	1.15SF		
Frame Size N													
36	5.5	10	11	7-1/2	7-1/2	7-1/2	7-1/2	25	15	25	25	**S811N37N3D**	
73	11	18.5	22	15	15	25	15	50	40	60	50	**S811N66N3D**	
Frame Size R													
103	15	30	33	25	25	30	25	60	60	75	75	**S811R10N3D**	
138	22	40	45	40	30	50	40	100	75	125	100	**S811R13N3D**	
Frame Size T													
199	33	59	63	50	50	60	50	125	125	150	150	**S811T18N3D**	
257	45	80	90	75	60	75	75	150	150	250	200	**S811T24N3D**	
324	55	100	110	100	75	100	100	250	200	300	250	**S811T30N3D**	
Frame Size U													
485	80	150	160	125	125	150	125	300	300	400	400	**S811U36N3D**	
580	100	180	200	150	150	200	150	400	300	550	450	**S811U42N3D**	
646	110	200	220	200	150	250	200	450	400	550	450	**S811U50N3D** ③	
Frame Size V													
485	80	150	160	125	125	150	125	300	300	400	400	**S811V36N3D**	
580	100	180	200	150	150	200	150	400	300	550	450	**S811V42N3D**	
646	110	200	220	200	150	250	200	450	400	550	450	**S811V50N3D**	
727	129	220	257	250	200	250	250	550	500	700	550	**S811V65N3D**	
816	147	257	295	250	250	300	250	600	550	750	700	**S811V72N3D**	
1021	180	315	375	300	250	300	300	750	600	900	750	**S811V85N3D**	
—	—	—	—	—	—	—	—	—	—	—	—	**S811V10N3D** ④	

③ U-Frame 500 Amp unit does not have IEC Certification.
④ For more information on optimum performance of the 1000A Frame Size V S811, see Appendix E of MN03902002E.

Discount Symbol **1CD1**

Inside-the-Delta Standard Duty Ratings

Table 39-70. 15 Second Ramp, 4 Starts per Hour, 450% Current Limit @ 40°C Ambient

Max. Continuous Motor Line Current	Three-Phase Motor											Catalog Number	Price U.S. $
	kW Rating (50 Hertz)			hp Rating (60 Hertz)									
	230	380 – 400	440	200V		230V		460V		575V			
	Volt	Volt	Volt	1.0SF	1.15SF	1.0SF	1.15SF	1.0SF	1.15SF	1.0SF	1.15SF		
Frame Size N													
47	7.5	12.5	15	10	10	15	10	30	25	40	30	S811N37N3D	
83	12.5	22	25	25	15	25	25	50	50	60	60	S811N66N3D	
Frame Size R													
126	18.5	37	40	30	30	40	30	75	60	100	100	S811R10N3D	
162	25	45	55	50	40	50	50	100	100	125	125	S811R13N3D	
Frame Size T													
266	45	80	90	75	60	100	75	150	150	250	200	S811T18N3D	
379	63	110	132	100	100	125	100	250	250	300	250	S811T24N3D	
485	80	150	160	125	125	150	125	300	300	400	400	S811T30N3D	
Frame Size U													
580	100	185	200	150	150	200	150	400	300	550	450	S811U36N3D	
695	110	200	250	200	150	250	200	450	400	600	550	S811U42N3D	
798	140	250	280	250	200	250	250	550	450	700	600	S811U50N3D ①	
Frame Size V													
580	100	185	200	150	150	200	150	400	300	550	450	S811V36N3D	
695	110	200	250	200	150	250	200	450	400	600	550	S811V42N3D	
798	140	250	280	250	200	250	250	550	450	700	600	S811V50N3D	
908	160	280	335	250	250	300	250	700	550	750	700	S811V65N3D	
1021	—	—	—	—	—	—	—	—	—	—	—	S811V72N3D	
1125	—	—	—	—	—	—	—	—	—	—	—	S811V85N3D	

① U-Frame 500 Amp unit does not have IEC Certification.

Table 39-71. 30 Second Ramp, 4 Starts per Hour, 450% Current Limit @ 40°C Ambient

Max. Continuous Motor Line Current	Three-Phase Motor											Catalog Number	Price U.S. $
	kW Rating (50 Hertz)			hp Rating (60 Hertz)									
	230	380 – 400	440	200V		230V		460V		575V			
	Volt	Volt	Volt	1.0SF	1.15SF	1.0SF	1.15SF	1.0SF	1.15SF	1.0SF	1.15SF		
Frame Size N													
36	5.5	10	12.5	7-1/2	7-1/2	7-1/2	7-1/2	25	15	25	25	S811N37N3D	
69	11	18.5	22	15	15	15	15	50	40	50	50	S811N66N3D	
Frame Size R													
96	15	25	30	25	25	30	25	60	50	75	60	S811R10N3D	
130	22	37	45	30	30	40	30	75	75	100	100	S811R13N3D	
Frame Size T													
257	45	80	90	75	60	75	75	150	150	250	200	S811T18N3D	
365	63	110	132	100	100	125	100	250	250	300	250	S811T24N3D	
448	80	140	160	125	125	150	125	300	250	400	300	S811T30N3D	
Frame Size U													
503	90	160	185	150	125	150	150	300	300	450	400	S811U36N3D	
580	100	180	200	150	150	200	150	400	300	550	450	S811U42N3D	
646	110	200	220	200	150	250	200	450	400	550	450	S811U50N3D ②	
Frame Size V													
503	90	160	185	150	125	150	150	300	300	450	400	S811V36N3D	
580	100	180	200	150	150	200	150	400	300	550	450	S811V42N3D	
646	110	200	220	200	150	250	200	450	400	550	450	S811V50N3D	
727	129	220	257	250	200	250	250	550	450	700	550	S811V65N3D	
796	—	—	—	—	—	—	—	—	—	—	—	S811V72N3D	
865	—	—	—	—	—	—	—	—	—	—	—	S811V85N3D	

② U-Frame 500 Amp unit does not have IEC Certification.

Discount Symbol **1CD1**

Inside-the-Delta Severe Duty Ratings

Severe Duty Ratings are defined as any combination of parameters that exceed the Standard Duty Ratings where the ramp time is over 30 seconds, the number of starts per hour exceeds 4, or the current limit set is over 300%.

Example: 35-Second Ramp, 5 Starts per Hour 350% Current Limit @ 40°C Ambient.

Table 39-72. Severe Duty Inside-the-Delta Ratings

Max. Continuous Motor Line Current	Three-Phase Motor											Catalog Number	Price U.S. $
	kW Rating (50 Hertz)			hp Rating (60 Hertz)									
	230	380 – 400	440	200V		230V		460V		575V			
	Volt	Volt	Volt	1.0SF	1.15SF	1.0SF	1.15SF	1.0SF	1.15SF	1.0SF	1.15SF		
Frame Size N													
39	5.5	10	11	7-1/2	7-1/2	10	7-1/2	25	15	30	25	**S811N37N3D**	
73	11	18.5	22	15	15	25	15	50	40	60	50	**S811N66N3D**	
Frame Size R													
111	15	30	33	25	25	30	25	75	60	75	75	**S811R10N3D**	
138	22	40	45	40	30	50	40	100	75	120	100	**S811R13N3D**	
Frame Size T													
199	33	59	63	50	50	60	50	125	125	150	150	**S811T18N3D**	
257	45	80	90	75	60	75	75	150	150	250	200	**S811T24N3D**	
324	55	100	110	100	75	100	100	250	200	300	250	**S811T30N3D**	
Frame Size U													
415	75	110	147	125	100	125	125	300	250	300	300	**S811U36N3D**	
526	90	160	185	150	120	150	150	400	300	450	400	**S811U42N3D**	
623	110	185	220	200	150	250	200	450	400	550	450	**S811U50N3D** ①	
Frame Size V													
415	75	110	147	125	100	125	125	300	250	300	300	**S811V36N3D**	
526	90	160	185	150	120	150	150	400	300	450	400	**S811V42N3D**	
623	110	185	220	200	150	250	200	450	400	550	450	**S811V50N3D**	
727	129	220	257	250	200	250	250	550	450	700	550	**S811V65N3D**	
816	147	257	295	250	250	300	250	600	550	750	700	**S811V72N3D**	
908	160	280	335	250	250	300	250	700	550	750	700	**S811V85N3D**	
—	—	—	—	—	—	—	—	—	—	—	—	**S811V10N3D** ②	

① U-Frame 500 Amp unit does not have IEC Certification.
② For more information on optimum performance of the 1000A Frame Size V S811, see Appendix E of MN03902002E.

Typical Power Wiring Diagrams

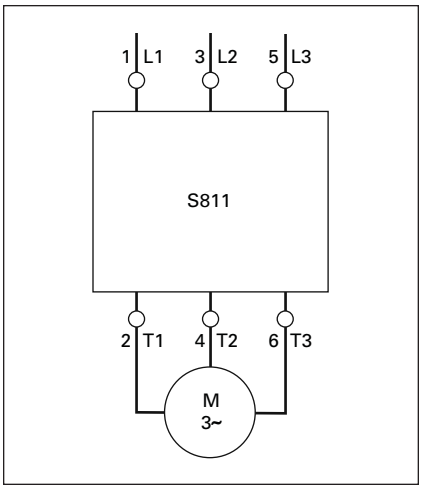

Figure 39-23. Line Connected Soft Starter Power Wiring Diagram

Discount Symbol **1CD1**

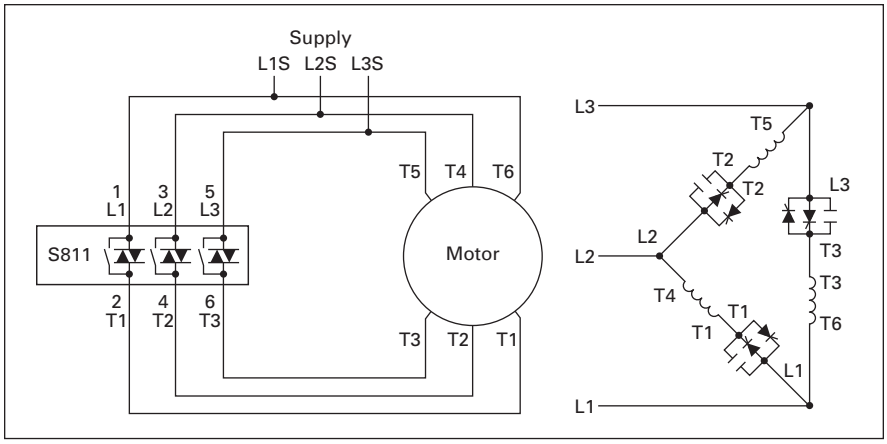

Figure 39-24. Inside-the-Delta Connected Soft Starter Power Wiring Diagram for a 6-Lead Motor

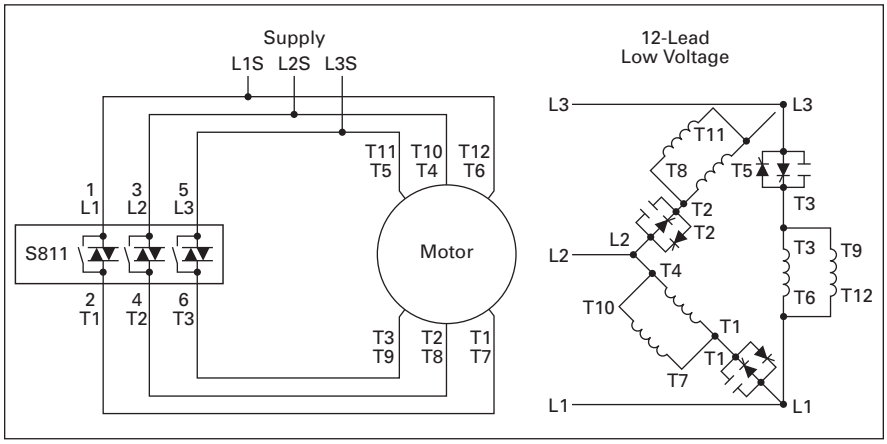

Figure 39-25. Inside-the-Delta Connected Soft Starter Power Wiring Diagram for a 12-Lead Low Voltage Motor

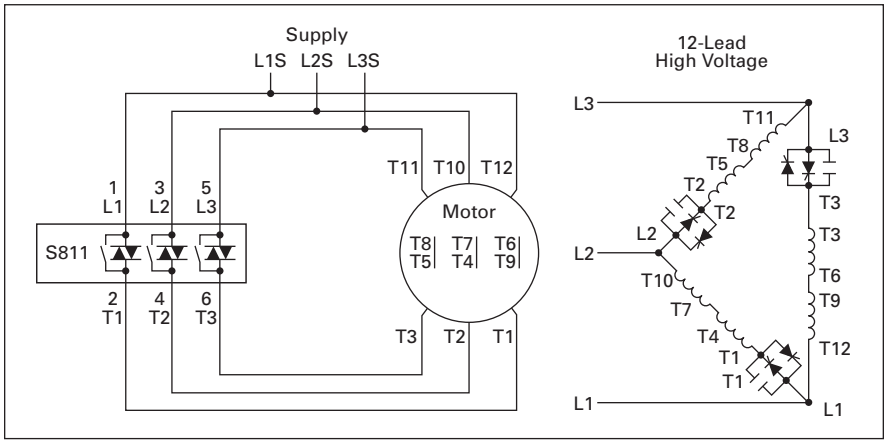

Figure 39-26. Inside-the-Delta Connected Soft Starter Power Wiring Diagram for a 12-Lead High Voltage Motor

Options

Extended Ramp

For a longer ramp acceleration time of .5 – 360 seconds, change the last digit in the Catalog Number from **Page 39-44** to **L**.

Table 39-73. Extended Ramp Option

Frame Size	Max. Current	Catalog Number	Price U.S. $
N	37	**S811N37N3L**	
	66	**S811N66N3L**	
R	105	**S811R10N3L**	
	135	**S811R13N3L**	
T	180	**S811T18N3L**	
	240	**S811T24N3L**	
	304	**S811T30N3L**	
U	360	**S811U36N3L**	
	420	**S811U42N3L**	
	500	**S811U50N3L** ①	
V	360	**S811V36N3L**	
	420	**S811V42N3L**	
	500	**S811V50N3L**	
	650	**S811V65N3L**	
	720	**S811V72N3L**	
	850	**S811V85N3L**	
	1000	**S811V10N3L**	

① U-Frame 500 Amp unit does not have IEC Certification.

Extended Ramp and 690V Option

690V ratings are available on the T and V Frames by changing the **8th** digit in the Catalog Number to **V**.

Table 39-74. 690V Option

Frame Size	Max. Current	Catalog Number	Price U.S. $
T	180	**S811T18V3L**	
	240	**S811T24V3L**	
	304	**S811T30V3L**	
V	360	**S811V36V3L**	
	420	**S811V42V3L**	
	500	**S811V50V3L**	
	650	**S811V65V3L**	
	720	**S811V72V3L**	
	850	**S811V85V3L**	

Pump Control

For pump control option, change the **8th** digit in the Catalog Number to **P**.

Table 39-75. Pump Control Option

Frame Size	Max. Current	Catalog Number	Price U.S. $
N	37	**S811N37P3S**	
	66	**S811N66P3S**	
R	105	**S811R10P3S**	
	135	**S811R13P3S**	
T	180	**S811T18P3S**	
	240	**S811T24P3S**	
	304	**S811T30P3S**	
U	360	**S811U36P3S**	
	420	**S811U42P3S**	
	500	**S811U50P3S** ②	
V	360	**S811V36P3S**	
	420	**S811V42P3S**	
	500	**S811V50P3S**	
	650	**S811V65P3S**	
	720	**S811V72P3S**	
	850	**S811V85P3S**	
	1000	**S811V10P3S**	

② U-Frame 500 Amp unit does not have IEC Certification.

Accessories

Surge Suppressors

The surge suppressor can mount on either the line or load side of the ***IT.*** Soft Starter. It is designed to clip the line voltage (or load side induced voltage).

Surge Suppressor

Table 39-76. Surge Suppressors

Description	Catalog Number	Price U.S. $
600V MOV for 200 mm and 290 mm units	**EMS39**	
690V MOV for 200 mm ③ and 290 mm units	**EMS41**	

③ T-Frame only.

Surge Suppressor Mounted on a 200 mm Device

Lug Kits

The 200 mm and 290 mm soft starters do not include lugs.

The 200 mm and 290 mm soft starters each have different lug options based on your wiring needs. Each lug kit contains three lugs which can be mounted on either the load or line side.

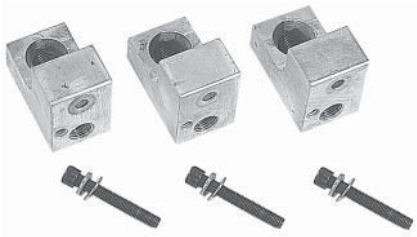

Lug Kits — EML23

Table 39-77. Lug Kits

Frame Size	Frame Designation	Description	Catalog Number	Price U.S. $
200 mm SSRV	T, U	2 cable connections, 4 AWG to 1/0 cable 1 cable connection, 4/0 to 500 MCM cable 2 cable connections, 4/0 to 500 MCM cable 1 cable connection, 2/0 to 300 MCM cable 2 cable connections, 2/0 to 300 MCM cable	**EML22** **EML23** **EML24** **EML25** **EML26**	
290 mm SSRV	V	2 cable connections, 4/0 to 500 MCM cable 4 cable connections, 4/0 to 500 MCM cable 6 cable connections, 4/0 to 500 MCM cable 4 cable connections, 2/0 to 300 MCM cable	**EML28** **EML30** **EML32** **EML33** ④	

④ The EML33 does not have a CSA Listing.

Lug Cover Kits

Replacement covers for the T and V frame are available in case of damage to the existing covers.

Table 39-78. Lug Cover Kits

Description	Catalog Number	Price U.S.$
Lug Cover T, U Frame	**EML27**	
Lug Cover V Frame	**EML34**	

Discount Symbol **1CD1**

Digital Interface Module

The Digital Interface Module (DIM) is available as a replacement part.

Table 39-79. DIM

Description	Catalog Number	Price U.S. $
Blank Cover (Filler)	**EMA68**	
DIM	**EMA91**	
Panel Mounting Kit — 3 ft. Cable 5 ft. Cable 8 ft. Cable 10 ft. Cable	**EMA69A** **EMA69B** **EMA69C** **EMA69D**	

Control Wire Connector

Table 39-80. Control Wire Connector

Description	Catalog Number	Price U.S.$
12 pin, 5 mm pitch Connector for Control Wiring	**EMA75L**	

User Manual

A comprehensive user manual is available and can be downloaded free of charge from www.eaton.com by performing a document search for MN03902002E.

Mounting Plates

The Mounting Plates are designed to help make it easy to install or retrofit the soft starter into enclosures and MCCs. The soft starter can be mounted onto the plate prior to installation. The mounting plate is designed with tear drop mounting holes for easier installation.

Table 39-81. Mounting Plates

Description	Catalog Number	Price U.S. $
Mounting Plate N Frame	**EMM13N**	
Mounting Plate R Frame	**EMM13R**	
Mounting Plate T, U Frame	**EMM13T**	
Mounting Plate V Frame	**EMM13V**	
Fan/Hood Accessory	**EMM18**	

Adapter Plates

The Adapter Plate allows customers to retrofit a V-Frame 290 mm Soft Starter with the U-Frame 200 mm Soft Starter.

Table 39-82. Adapter Plates

Description	Catalog Number	Price U.S. $
Adapter Plates ①	**EMM13U**	

① For more information see Pub. 51719.

Vibration Plates

The Vibration Plates allow the soft starter to be applied in high shock and vibration applications. The vibration plate allows vibration up to 5g and shock in up to 40g. The soft starter is mounted onto the vibration plate prior to installation in the panel.

Table 39-83. Vibration Plates

Description	Catalog Number	Price U.S. $
Vibration Plate N Frame	**EMM14N**	
Vibration Plate R Frame	**EMM14R**	
Vibration Plate T, U Frame	**EMM14T**	
Vibration Plate V Frame	**EMM14V**	

Power Supplies

24V DC Power Supply which can be used with the S811 SSRV or as a stand-alone device.

Table 39-84. Power Supplies

Description	Catalog Number	Price U.S. $
115V AC Input 24V DC Output	**PSS55A**	
230V AC Input 24V DC Output	**PSS55B**	
380 – 480V AC Input 24V DC Output	**PSS55C**	

DIN Rail Power Supply Mounting Kit (35 mm)

Table 39-85. DIN Rail Mounting Kit

Description	Catalog Number	Price U.S. $
DIN Rail Mounting Kit (35 mm)	**PSSDIN**	

Standards and Certifications

- IEC 60947-4-2
- EN 60947-4-2
- UL Listed (NMFT) – Frame N37 to V85
- UL Recognized (NMFT2) – Frame V10
- CE Marked
- CSA Certified (3211 06)
- CSA Elevator (2411 01)

Instructional Leaflets

- Instruction Manual: MN03902002E
- Outline Drawings:
  - 65 mm, N-Frame: 10-8574
  - 110 mm, R-Frame: 10-8575
  - 200 mm, T-Frame: 10-8576
  - 200 mm, U-Frame: 10-8857
  - 290 mm, V-Frame: 10-8577

Discount Symbol **1CD1**

Technical Data and Specifications

Table 39-86. Specifications — *IT.* Soft Starter

Soft Starter (Partial Catalog Number)	S811 N37	S811 N66	S811 R10	S811 R13	S811 T18	S811 T24	S811 T30	S811 U36	S811 U42	S811 U50 ①	S811 V36	S811 V42	S811 V50	S811 V65	S811 V72	S811 V85	S811 V10 ②
Max. Current Capacity	37	66	105	135	180	240	304	360	420	500	360	420	500	650	720	850	1000
FLA Range	11 – 37	20 – 66	32 – 105	42 – 135	56 – 180	75 – 240	95 – 304	112 – 360	131 – 420	156 – 500	112 – 360	131 – 420	156 – 500	203 – 650	225 – 720	265 – 580	320 – 1000
Dimensions																	
Width in Inches (mm)	2.66 (67.6)		4.38 (111.3)		7.67 (194.8)			7.73 (196.3)			11.05 (280.6)						
Height in Inches (mm)	7.38 (187.4)		7.92 (201.2)		12.71 (322.9)			12.72 (323.1)			16.57 (420.8)						
Depth in Inches (mm)	6.47 (164.4)		6.66 (169.2)		6.39 (162.4)			7.08 (179.9)			7.35 (186.6)						
Weight in lbs. (kg)	5.8 (2.6)		10.5 (4.8)		48 (21.8) with lugs 41 (18.6) without lugs			48 (21.8) with lugs 41 (18.6) without lugs			103 (46.8) with lugs 91 (41.4) without lugs						
General Information																	
Bypass Mechanical Lifespan	10M																
Insulating Voltage Ui	660V																
Ramp Time Range	.5 – 180 Seconds (.5 – 360 Seconds Extended Ramp)																
Resistance to Vibration	3g																
Resistance to Shock	15g																
Electrical Information																	
Operating Voltage	200 – 600V																
Operating Frequency	47 – 63 Hz																
Overload Setting	30 – 100%																
Trip Class	5, 10, 20, & 30																
Cabling Capacity (IEC 947)																	
Number of Conductors	1		1		1 or 2			1 or 2			2, 4 or 6						
Wire Sizes	14 – 2		14 – 4/0		4 AWG to 500 MCM			4 AWG to 500 MCM			2/0 to 500 MCM						
Type of Connectors	Box Lug				Add-On Lug Kit												
Control Wiring (12-Pin)																	
Wire Sizes in AWG	22 – 14																
Number of Conductors (Stranded)	2 (or one AWG 12)																
Torque Requirements in lb-in	3.5																
Solid, Stranded or Flexible Max. Size in mm^2	3.31																
Control Power Requirements																	
Voltage Range (24V ± 10%)	21.6 – 26.4																
Steady State Current Amps	1.0		1.0		1.0			1.0			1.4						
Inrush Current Amps	10		10		10			10			10						
Ripple	1%																
Relays (1) Class A and C																	
Voltage AC — maximum	240																
Voltage DC — maximum	120																
Amps — maximum	3																
Environment																	
Temperature — Operating	-30 – 50°C (No derating) Consult factory for operation > 50˚ C																
Temperature — Storage	-50 – 70°C																
Altitude	<2000 Meters — Consult factory for operation > 2000m																
Humidity	<95% Non-condensing																
Operating Position	Any																
Pollution degree IEC947-1	3																
Impulse withstand Voltage IEC947-4-1	6000V																

① U-Frame 500 Amp unit does not have IEC Certification.
② UR Recognized Product.

Dimensions

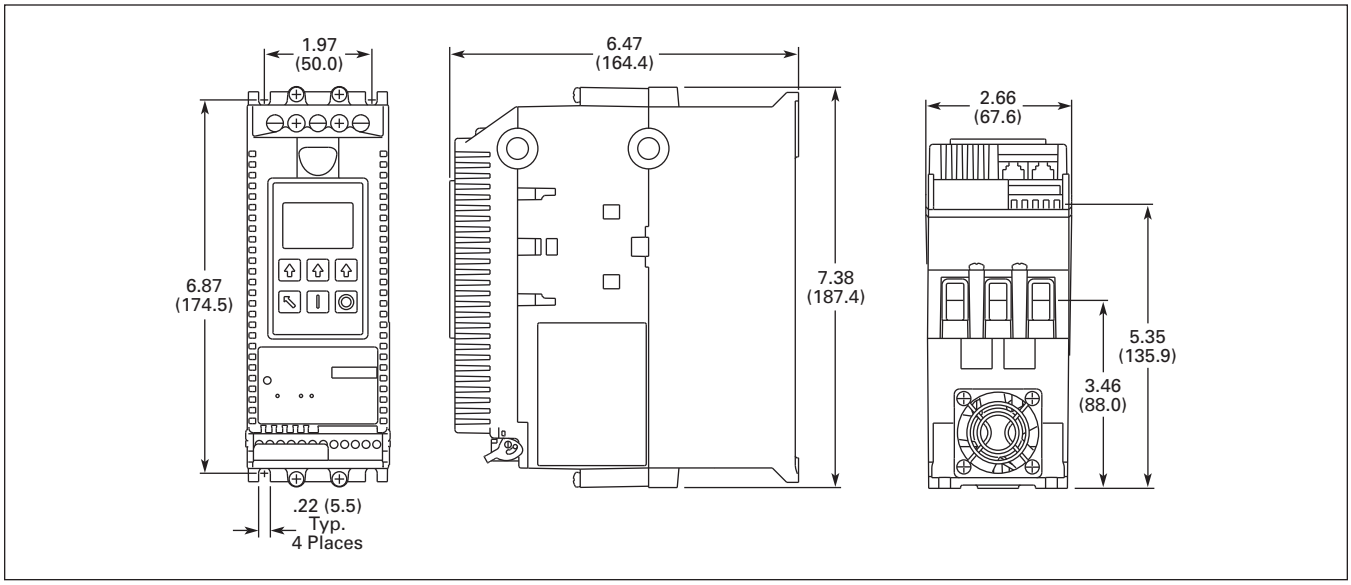

Figure 39-27. N-Frame (65 mm) S811 Approximate Dimensions in Inches (mm)

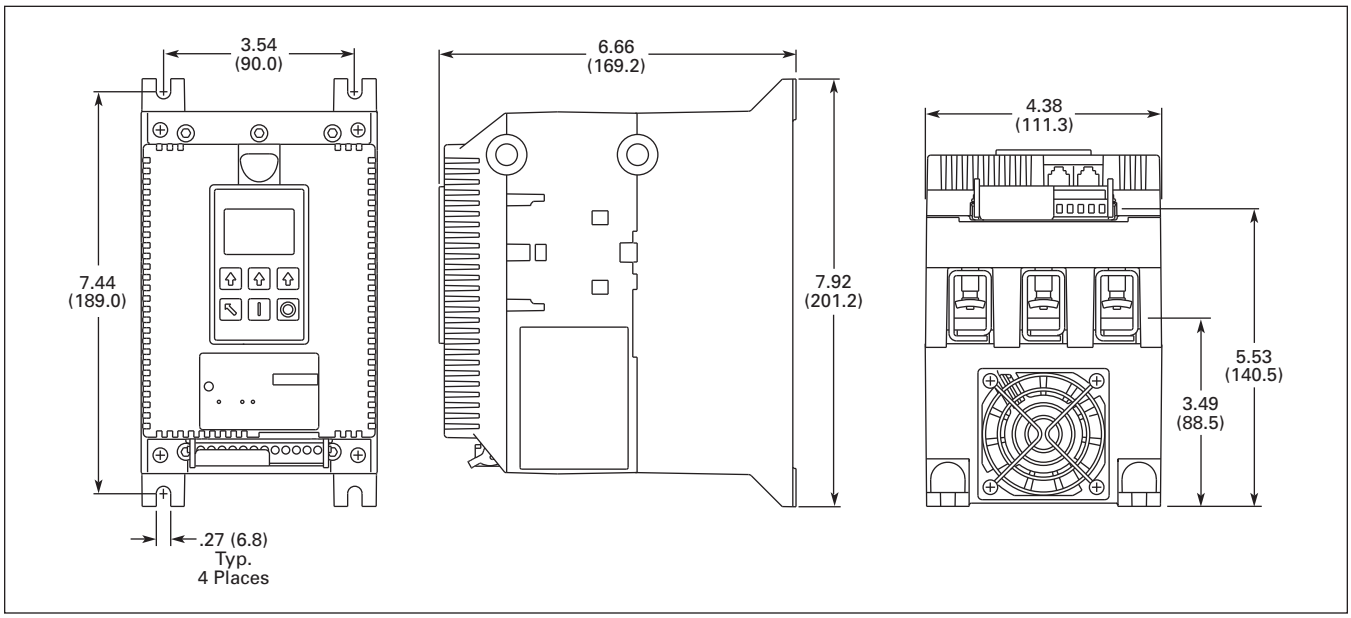

Figure 39-28. R-Frame (110 mm) S811 Approximate Dimensions in Inches (mm)

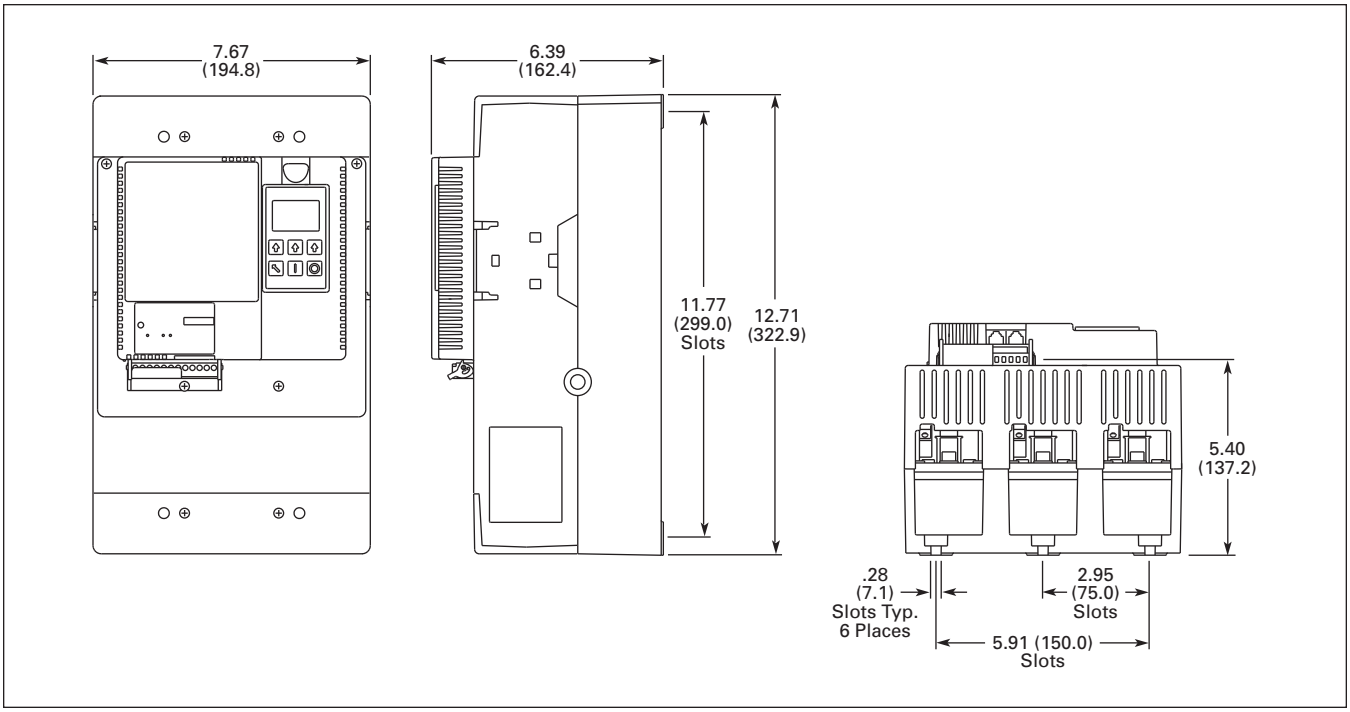

Figure 39-29. T-Frame (200 mm) S811 Approximate Dimensions in Inches (mm)

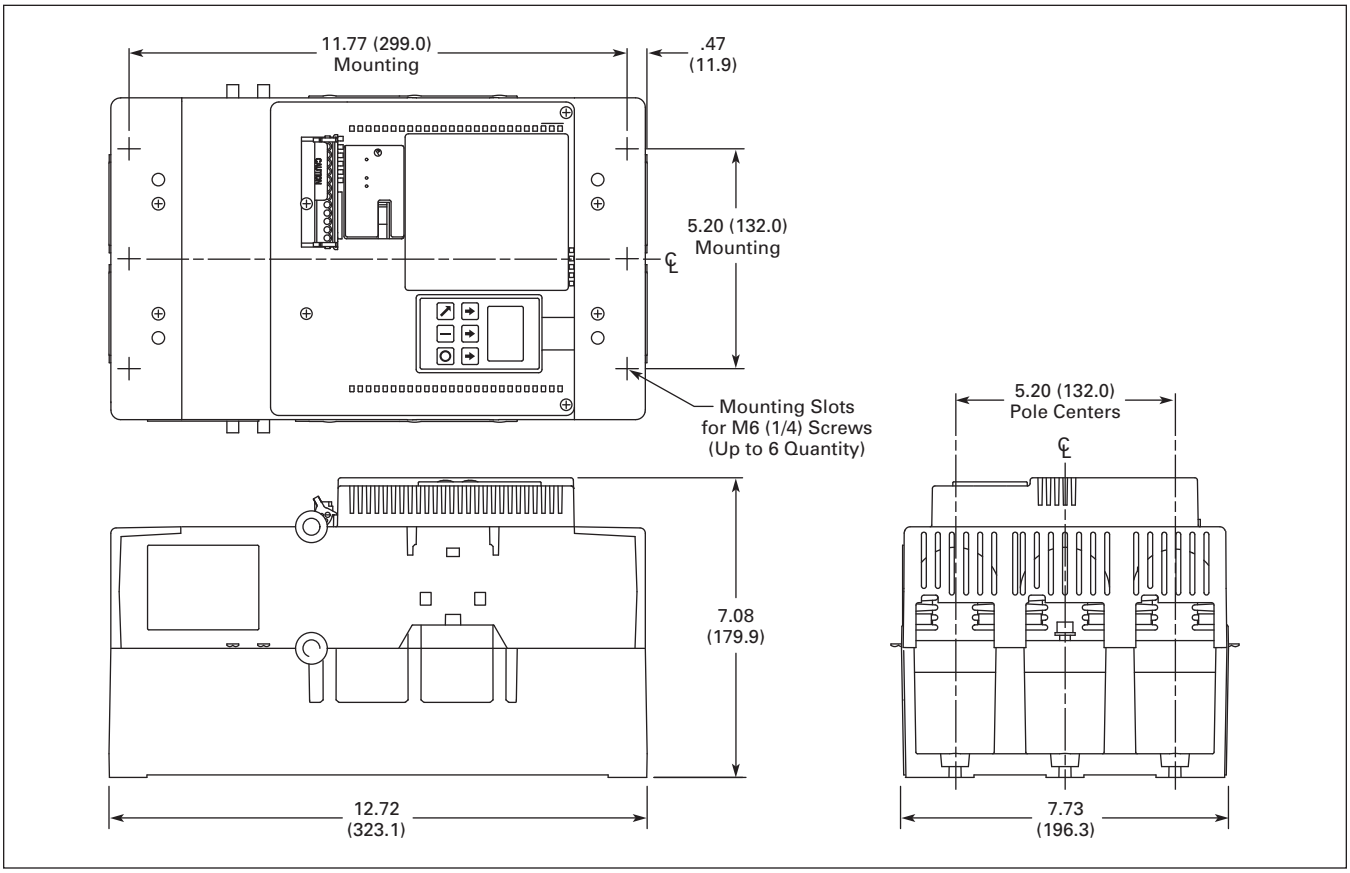

Figure 39-30. U-Frame (200 mm) S811 Approximate Dimensions in Inches (mm)

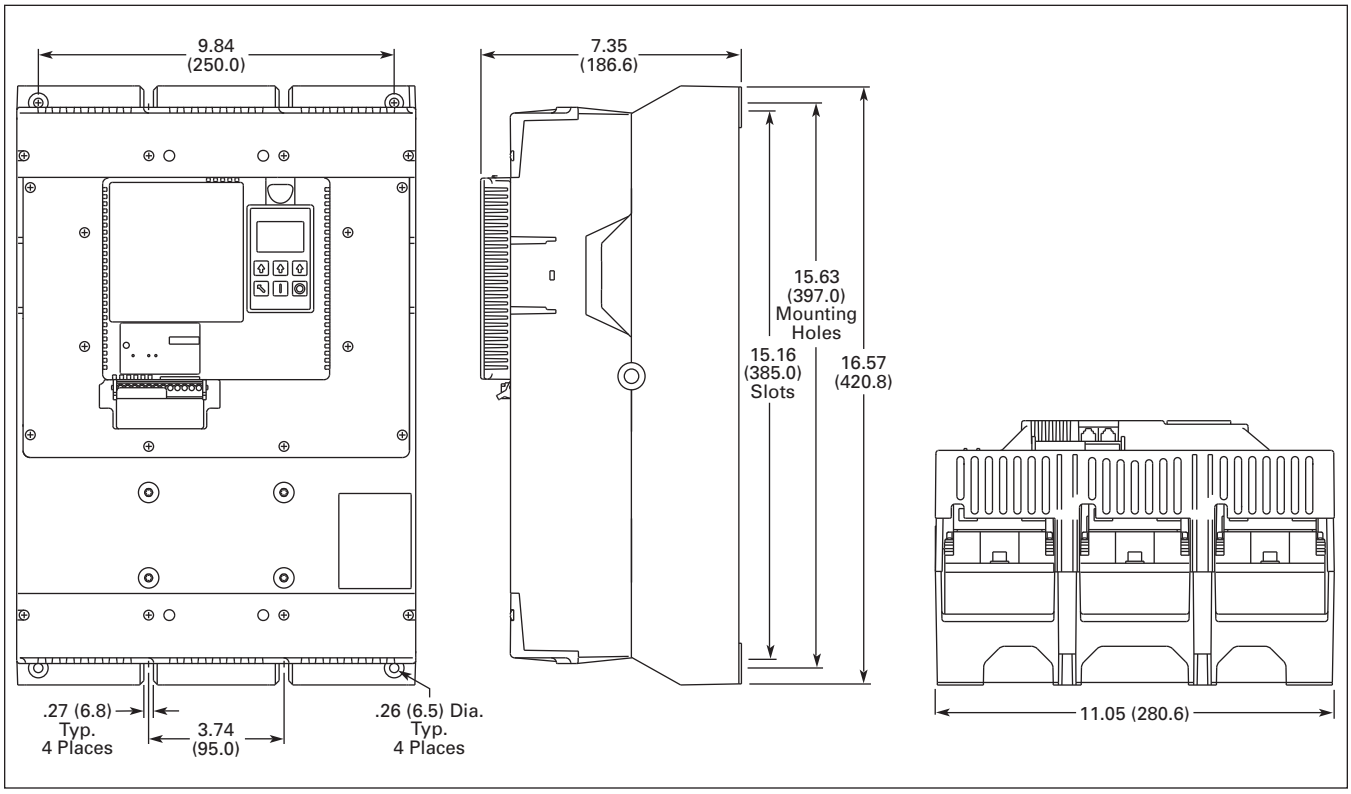

Figure 39-31. V-Frame (290 mm) S811 Approximate Dimensions in Inches (mm)

Contents

Description *Page*

Type MV811, Intelligent Technologies (*IT.*) Medium Voltage Soft Starters

Operation **39-65**
Catalog Number Selection **39-66**
Product Selection **39-67**
Options **39-74**
Accessories **39-75**
Renewal Parts **39-77**
Standards and Certifications **39-77**
Instructional Leaflets **39-77**
Technical Data and Specifications **39-78**
Dimensions **39-81**

Type MV811 Soft Starter

Product Description

The Cutler-Hammer® Intelligent Technologies (*IT.*) MV811 Line of Reduced Voltage Soft Starters from Eaton's electrical business is very compact, multi-functional, easy to install and easy to program. Designed to control the acceleration and deceleration of three-phase medium voltage motors up to 7.5 kV. The line is available from 11 amp through 420 amp applications as an open unit or in the Ampgard® *IT.* starter assembly. This product is perfect for the EOEM who wants to add value by installing the MV811 in their own structure design. The MV811 can easily fit in the space where an existing Reduced Voltage Auto Transformer was.

The *IT.* MV811 Line of Reduced Voltage Soft Starters comes standard with the following:

- Control Module
- Digital Interface Module

Application Description

The MV811 line of *IT.* Soft Starters is designed to work with three-phase center grounded star (WYE) source and medium voltage motors in a WYE or Delta (3-lead) configuration. The starter uses Silicon Controlled Rectifiers (SCRs) to control the voltage to soft start and soft stop the motor. After the motor is started, internal run bypass contactors close resulting in the motor running across the line. The built-in solid-state overload protects the motor from overload conditions with sophisticated algorithms that model true motor heating, resulting in better motor protection and fewer nuisance trips. Advanced protective and diagnostic features reduce downtime.

The MV811 has a unique inclusive design encasing the SCRs, power circuitry, run bypass contactors and overload protection, minimizing required mounting space and installation time. The separate control module provides mounting flexibility.

Each MV811 power pole is rated at up to 420 amps at 2.5 kV. Two units wired in series provide ratings up to 420 amps at 5 kV; three units wired in series provide ratings up to 420 amperes at 7.5 kV. A voltage ramp start or current limit start is available. Kick-start is available in either starting mode. The soft stop option allows for a ramp stop time that is longer than the coast to stop time. The pump control option provides a smooth transition for starting and stopping a motor and eliminating the "water-hammer" effect that can damage pipes, valves and pumps.

The MV811 offers an impressive array of advanced protective features. Not only are the protective features selectable, but many offer variable settings allowing the user to fine tune the starter to meet specific system requirements.

The MV811 has an easy-to-use Digital Interface Module (DIM) that allows the user to configure the device and to read system parameters. The DIM includes an LCD display and keypad to scroll through the various menus. The DIM allows the user to modify control parameters, enable or disable protections, set communication variables, monitor system parameters such as line voltages and currents, and access the fault queue.

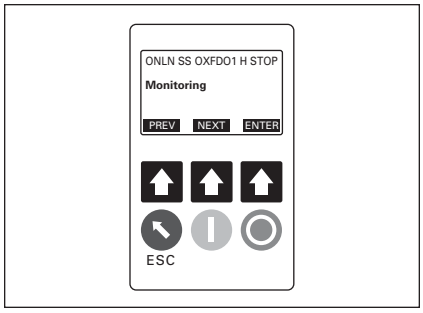

Figure 39-32. Digital Interface Module (DIM)

The DIM can be removed from the MV811 and remote mounted. Kits are available to door mount the DIM, enabling users to safely configure, commission, monitor and troubleshoot the system at the electrical panel without opening the enclosure door. This will help eliminate the possibility of an arc flash incident.

Communications

The MV811 has built-in communication capabilities through QC (Quick Connect) Port. QCPort enables the soft starter to be connected to a variety of networks, including DeviceNet™, EtherNet/Modbus, EtherNet/IP and PROFIBUS. The advantage of QCPort is that multiple control components can be connected to one Cutler-Hammer *IT.* D77D gateway. The gateway concentrates data from the devices into a single node. Configuration is simple — a single press of the gateway's Auto Configuration button sets the system up for default operation. This automatically configures the I/O assemblies to the QCPort system devices. The data from these devices are then assembled into single input and output messages.

The MV811 communication parameters can be configured with the DIM or through the fieldbus using CH Studio Component Manager. Advanced communication configuration settings provide the system integrator with powerful tools to facilitate system optimization.

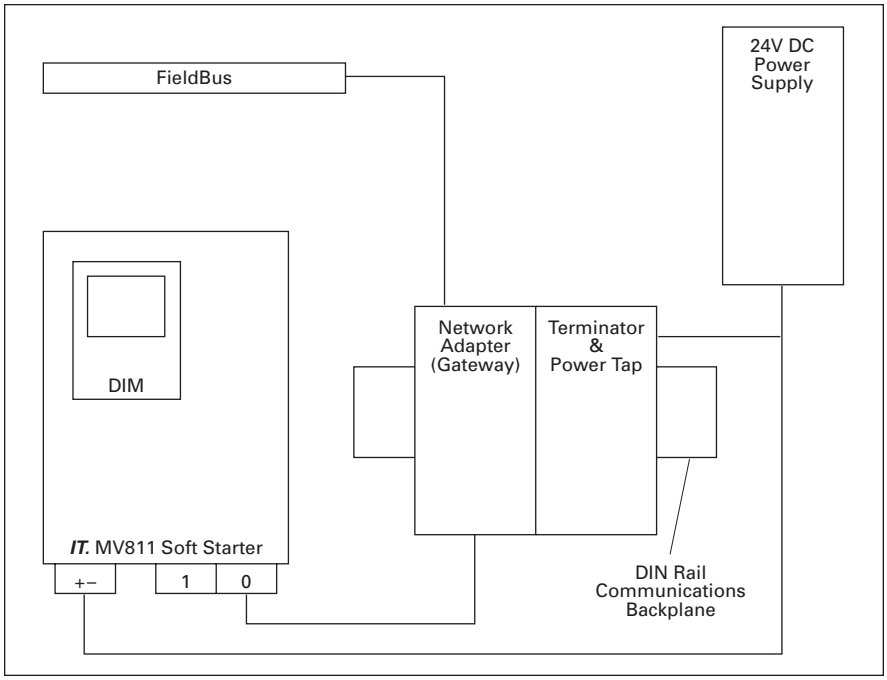

Figure 39-33. MV811 Connection Diagram

Table 39-87. Communications Reference

Description	Part Number	Catalog Page ①
DeviceNet Network Adapter	**D77D-DNA**	**50-40**
EtherNet Modbus Network Adapter	**D77D-EMA**	**50-42**
EtherNet/IP Network Adapter	**D77D-EIP**	**50-44**
PROFIBUS Network Adapter	**D77D-PNA**	**50-46**
Terminator and Power Tap	**D77E-QPLR**	**50-35**
DIN Rail Communications Backplane, 7-position	**D77E-BP7**	**50-35**
DIN Rail Communications Backplane, 12-position	**D77E-BP12**	**50-35**
2.5 kV Power Supply (110 — 240V AC Input)	**PSS300E** ②	**44-65**
2.5 kV Power Supply (380 — 480V AC Input)	**PSS600C** ②	**44-65**
5 kV Power Supply (380 — 480V AC Input)	**PSS600C** ②	**44-65**
7.2 kV Power Supply (380 — 480V AC Input)	**PSS600C** ②	**44-65**

① Catalog page numbers refer to the Control products catalog, CA08102001E.
② A minimum wire size of 14 AWG (2.5 mm^2) should be used between the power supply and the 24V DC +/- terminals.

Features and Benefits

- DIM provides an intuitive, easy-to-use human interface with powerful configuration capabilities to maximize system performance.
- Door or device mounted DIM enables users to safely configure, commission, monitor and troubleshoot the system at the electrical panel without opening the enclosure door, eliminating the possibility of an arc flash incident.
- System operating parameters can be monitored enterprise-wide through a communications network. Increase uptime by providing data for process management and preventive diagnostics.
- Significantly reduces the heat generated by the starter, minimizing enclosure sizes and costs. Run bypass mode greatly reduces internal heating created by the SCRs, while the bypass contractor directly connects the motor to the line and improves system efficiency by reducing internal power losses.
- Provides accurate current measurement and trip settings. Sophisticated algorithms solve a series of differential equations that model true motor heating and cooling resulting in superior motor overload protection while minimizing nuisance trips. Advanced selectable protective features safeguard the motor and system against a variety of system faults.
- Eliminate the need for additional devices, thereby reducing enclosure sizes, minimizing installation and wiring time, and reducing enclosure sizes, minimizing installation and wiring time, and reducing overall assembly size and cost.
- Provide unlimited starting configurations allowing for maximum application flexibility.
- Enables soft starting of high friction loads.
- Allows for wide application range while offering users the flexibility to fine tune the starter to match their specific application requirements.
- Sophisticated pump algorithm on both starting and stopping minimize the pressure surges that cause water hammer. The pump control option will maximize the life of the pump and piping systems while minimizing the downtime caused by system failure.
- Control all three phases providing smooth acceleration and deceleration.
- Reduces wear on belts, gears, chains, clutches, shafts and bearings.
- Enhances personnel and equipment safety.
- Reduce the peak inrush current's stress on the power system.
- Provides control for applications where an abrupt stop of the load is not acceptable.
- Minimize peak starting torque to diminish mechanical system wear and damage.
- Removable, lockable control terminal block reduces maintenance costs. Also provides the opportunity for OEMs to reduce assembly and test costs by utilizing pre-assembled wire harnesses.

- Provides OEM customers with design flexibility. This feature results in the control circuitry operating at lower temperatures, maximizing the life of the electronics components. Electromagnetic interference from the power circuit is also minimized.
- Encases the SCRs, power circuitry, run bypass contactors and overload protection. This uncluttered design simplifies installation and is the perfect product solution for electrical original equipment manufacturers (EOEMs).

Protective Features

All protective features can be configured, enabled or disabled with the DIM or through the communications network.

Motor Overload

The MV811 includes electronic overload protection as standard. The overload meets applicable requirements for a motor overload protective device. The overload protects the motor from over heat conditions with the use of sophisticated algorithms that model true motor heating, resulting in superior motor protection and fewer nuisance trips.

The MV811 calculates a thermal memory value. A 100% value represents the maximum safe temperature of the motor. When the thermal memory value reaches 100%, an overload trip will occur removing power to the motor. Upon trip, the MV811 stores the calculated motor heating value and will not allow a motor re-start until the motor has sufficiently cooled. This feature ensures the motor will not be damaged by repeated overload trip, reset and re-start cycles.

The thermal memory value can be monitored through the DIM or the communications network. The thermal memory value can be of great use in determining an impending overload trip condition. Alarms can be implemented in the process monitoring system warning of an impending trip before a trip occurs halting the process. Costly system downtime can be avoided.

The trip current is adjusted to match the specific application requirements by entering the motor nameplate full load current rating and trip class. The FLA adjustment includes a 3 to 1 adjustment range. The overload trip class is adjustable from class 5 through class 30. The overload is ambient temperature compensated — meaning its trip characteristics will not vary with changes in ambient temperature. The overload protection can be enabled, disabled, or disabled on start.

Short Circuit

The use of a short circuit protective device in coordination with the MV811 is required in branch motor circuits by most electrical codes. Short circuit coordination ratings with both fuses and Cutler-Hammer molded case circuit breakers are available providing customers with design flexibility. The MV811 has short circuit coordination ratings as an open component, an enclosed starter, and in a motor control center.

Jam

Excessive current and torque up to locked rotor levels can occur in a jam condition. The condition can result in stress and damage to the motor, load, mechanical system, and the electrical distribution system. Jam protection prevents the stress and damage from a jam during normal run. After the motor is started, a current greater than 300% FLA setting will cause the starter to trip on a jam fault.

Stall

Excessive current and torque up to locked rotor levels can occur in a stall condition. The condition can lead to an overload trip and result in stress and damage to the motor, load, mechanical system, and the electrical distribution system. Stall protection prevents stress and damage to a motor that has not come up to speed, or stalled after the soft start time. The MV811 will trip to protect the system in the event that the motor did not get to the rated speed in the defined soft start period. A current greater than 200% FLA at the end of the soft start period will cause the starter to trip on a stall fault.

Pole Over Temperature

High ambient temperatures, extended ramp times and high duty cycle conditions may cause the MV811 power pole conductors to reach a temperature that exceeds their thermal rating. The MV811 is equipped with sensors that monitor the temperature of the power poles. Over temperature protection occurs if the device's thermal capacity is exceeded. The soft starter will trip in over temperature conditions, preventing device failure.

The device pole temperature value can be monitored through the DIM or the communications network. This feature can be of use in determining an impending over temperature trip condition. Alarms can be implemented in the process monitoring system warning of an impending trip before a trip occurs, halting the process. Costly system shutdown can be avoided.

Phase Loss

Loss of a phase can cause a significant increase in the current drawn in the remaining two phases. Phase loss can lead to motor damage before an eventual overload trip occurs. Phase loss is typically an indication of a failure in the electrical distribution system. The MV811 will detect a phase loss and trip if any phase current drops below a preset value. The phase loss trip level is adjustable from 0% to 100% of the average of the other two phase levels with an adjustable trip delay of 0.1 to 60 seconds.

Phase Imbalance

Phase current or voltage imbalance can cause a significant increase in the current drawn in the remaining two phases. Phase imbalance can lead to motor damage before an eventual overload trip. Phase imbalance is typically an indication of a failure in the electrical distribution system or the motor. The MV811 will detect both current and voltage phase imbalances and trip if any phase becomes imbalanced as compared to the average of the other two phases.

The phase current imbalance trip level is adjustable from 0% to 100% of the average of the current in the other two phases with an adjustable trip delay of 0.1 to 60 seconds.

The phase voltage imbalance trip level is adjustable from 0% to 100% of the average of the voltage in the other two phases with an adjustable trip delay of 0.1 to 60 seconds.

Reset Mode

The MV811 can be set up for automatic or manual reset on trip. The manual reset mode requires the operator to physically press the RESET button located on the soft starter. The overload can be manually reset through the DIM or through the communications network. The overload can also be electrically reset by energizing a 24V DC input on the control terminal block.

The automatic reset mode allows the soft starter to be automatically reset as soon as the trip condition is no longer present. With the automatic reset mode, after the fault is no longer present, the motor will be restarted as soon as a valid start signal is present.

Phase Reversal

The MV811 can determine if the proper line phase sequence is present by default. The device will trip if the line phase sequence is something other than A-B-C. The S811 can be configured to operate under reversed phase conditions (A-C-B).

Shorted SCR Detection

The MV811 monitors the operation of the power poles and will trip under a shorted SCR condition.

Open SCR Detection

The MV811 monitors the operation of the power poles and will trip under an open SCR condition.

Low Current

Low current conditions can be a result of a loss of load or a failure in the mechanical system. The MV811 has low current protection that will trip if the average RMS current falls below a preset value. The low current protection can be programmed as a percent of motor FLA from 0% to 100%.

Low Voltage

Low voltage conditions can result from disturbances in the electrical power distribution system. Low voltage conditions can cause a malfunction and damage to electrical equipment. The MV811 has low voltage protection that will trip if the average RMS voltage falls below a preset value. The low voltage protection can be programmed as a percent of nominal voltage from 1% to 99% with a trip delay of 0.1 to 60 seconds.

High Voltage

High voltage conditions can result from disturbances in the electrical power distribution system. High voltage conditions can cause malfunctions or failures of electrical equipment. The MV811 has high voltage protection that will trip if the average RMS voltage is greater than a preset value. The high voltage protection can be programmed as a percent of nominal voltage from 101% to 120% with a trip delay of 0.1 to 60 seconds.

Monitoring Capabilities

The MV811 has an impressive array of system monitoring capabilities that allow users to access real time process and diagnostic data. This data can be viewed at the device with the DIM or through a communications network. Data over a communications network can provide valuable insight into the condition of the equipment and processes. Maintenance and production personnel can monitor critical operational and maintenance data from a central control station that can be located far away from the production facility. Process data can be monitored to determine system anomalies that may indicate a need for preventive maintenance or an impeding failure. Adjustments made through the communications network can reduce costs by minimizing the time traveling to the location where the motor controls are located. When faults do occur, real time fault data can assist maintenance in troubleshooting and planning repair resources. Remote reset signals can be given to tripped devices without the need for manual intervention by maintenance personnel.

Average Line Current

Provides the average of the three-phase RMS line currents in amps, accurate to within 2%. Current data can be used to indicate a need for maintenance. Increased currents in a fixed load application can indicate a reduction in system efficiencies and performance, signifying system maintenance is due.

Average Pole Current

Provides the average of the three-phase RMS pole currents in amps, accurate to within 2%. The pole current is the current through the soft starter. The line and pole current will be identical in in-line applications, and will differ in inside-the-delta applications.

Average line current as a % FLA

Provides the average RMS line current as a percentage of the MV811 FLA setting.

Three-Phase Line Currents

Provides three RMS phase line currents in amps, accurate to within 2%. Imbalances or changes in the relative phase current to one another can indicate anomalies in the motor or electrical distribution system.

Three-Phase Pole Currents

Provides three RMS phase pole currents in amps, accurate to within 2%. The pole current is the current through the soft starter. The line and pole current will be identical in in-line applications, and will differ in inside-the-delta applications.

Three-Phase Line Voltages

Provides the individual RMS three-phase line voltages. Imbalances or changes in the relative phase voltage to one another can indicate anomalies in the motor or electrical distribution system. Voltage can be used to monitor electrical distribution system performance. Warnings, alarms and system actions to low or high voltage conditions can be implemented.

Percent Thermal Memory

Provides the real time calculated thermal memory value. The MV811 calculates thermal memory value. A 100% value represents the maximum safe temperature of the motor. When the thermal memory value reaches 100%, an overload trip will occur, removing power to the motor.

The thermal memory value can be of great use in determining an impending overload trip condition. Alarms can be implemented in the process monitoring system warning of an impending trip before a trip occurs, halting the process. Costly system downtime can be avoided.

DC Control Voltage

Monitors level of the 24V DC control voltage. Fluctuations in control voltage can cause component malfunction and failure. System control voltage data can be used to implement warnings, alarms and system actions to low or high voltage conditions.

Pole Temperature

Increases in pole temperature are caused by increases in ambient temperature, start/stop times and start duty cycles. Changes in pole temperatures represent a change in system operating conditions. Identifying unexpected operating conditions or changes can prompt maintenance and aid in process evaluation activities.

Device Temperature

An increase in device temperature is a strong indication of an increase in ambient temperature. High ambient temperature operation can be identified with the Device Temperature data. Ambient temperature increases can be due to loss of enclosure cooling fans or blocked venting. High ambient temperatures will reduce the life of all electrical equipment in the enclosure.

Start Count

Start count data can be used to monitor system output, schedule preventative maintenance, identify system anomalies and identify changes in system operation.

Diagnostics

Fault Queue

Current fault and a fault queue containing the last nine system faults can be read through the DIM or communications network. Fault identification can minimize troubleshooting time and cost and prevent arc flash incidents. The fault queue can be remotely accessed through a communications network to assist in planning maintenance resources. 30 different faults can be identified by the MV811.

Control Status

The MV811 provides data that represents system conditions that can be read through the DIM or the communications network. This data identifies the status of the system and the control commands the system is requesting of the MV811. This can be used for advanced troubleshooting and system integration activities.

Breaker Status

The MV811 has provisions to read and display circuit breaker status. Cutler-Hammer communicating Cover Control or other communicating protective device is required to take advantage of this feature.

Operation

Starting and Stopping Modes

The MV811 has a variety of starting and stopping methods to provide superior performance in the most demanding applications. The motor can be started in either Voltage Ramp Start or Current Limit Start mode. Kick Start and Soft Stop are available within both starting modes.

Voltage Ramp Start

Provides a voltage ramp to the motor resulting in a constant torque increase. The most commonly used form of soft start, this start mode allows you to set the initial torque value and the duration of the ramp to full voltage conditions. Bypass contactors close after ramp time.

- Adjustable initial torque 0 – 85% of locked rotor torque.
- Adjustable ramp time 0.5 – 180 seconds (can be extended with factory modification).

Current Limit Start

Limits the maximum current available to the motor during the start phase. This mode of soft starting is used when it becomes necessary to limit the maximum starting current due to long start times or to protect the motor. This start mode allows you to set the maximum starting current as a percentage of locked rotor current and the duration of the current limit. Bypass contactors close after current limit time.

- Maximum current of 0 – 85% locked rotor current.
- Adjustable ramp time 0.5 – 180 seconds (can be extended with factory modification).

Kick Start

Selectable feature in both Voltage Ramp Start and Current Limit Start modes. Provides a current and torque "kick" for 0 to 2.0 seconds. This provides greater initial current to develop additional torque to breakaway a high friction load.

- 0 – 85% of locked rotor torque
- 0 – 2.0 seconds duration

Soft Stop

Allows for a controlled stopping of a load. Used when a stop-time that is greater than the coast-to-stop time is desired. Often used with high friction loads where a sudden stop may cause system or load damage.

- Stop time = 0 – 60 seconds.

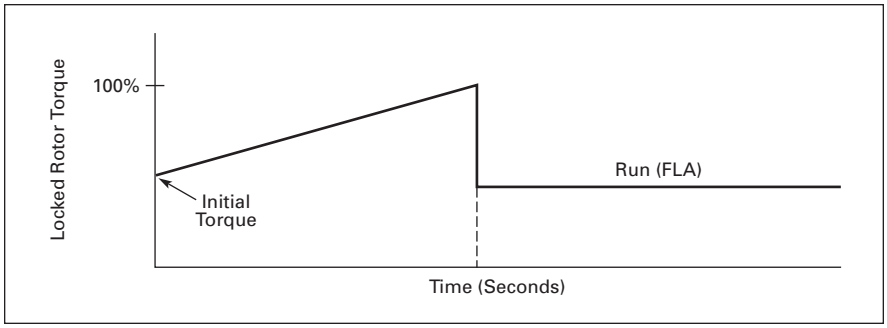

Figure 39-34. Starting Characteristics — Ramp Start

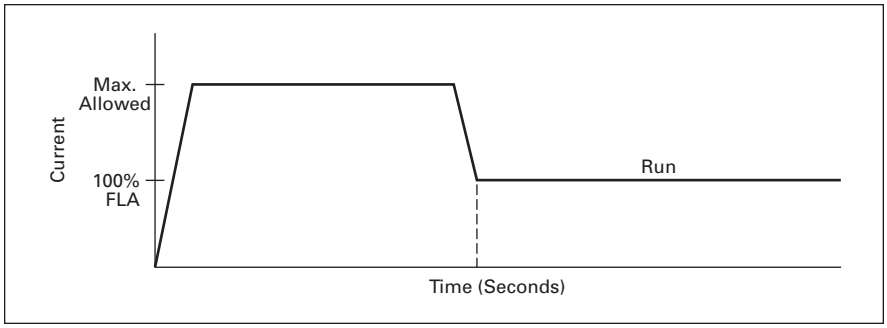

Figure 39-35. Starting Characteristics — Current Limit Start

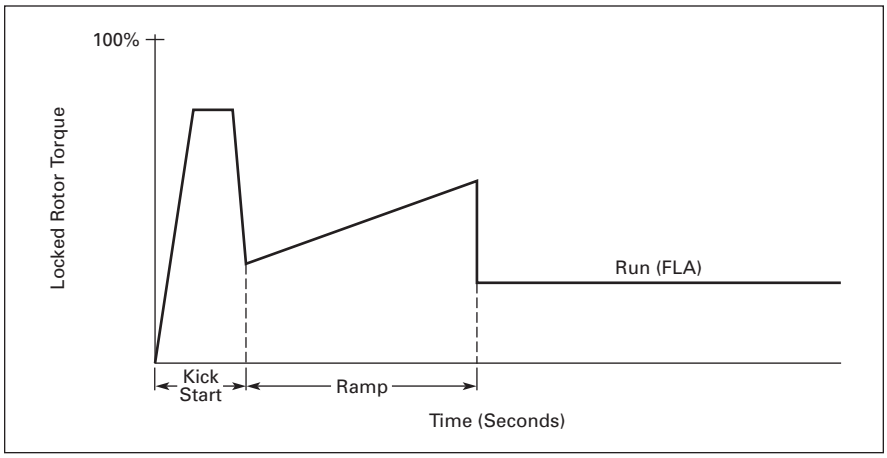

Figure 39-36. Starting Characteristics — Kick Start

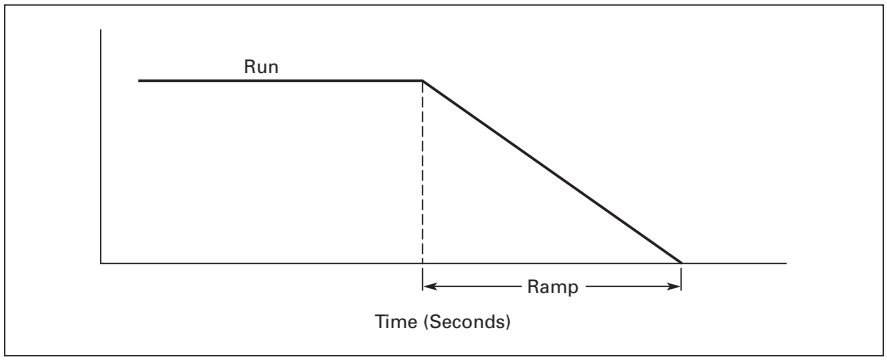

Figure 39-37. Starting Characteristics — Soft Stop

Component Identification

MV811 Soft Starter Assembly

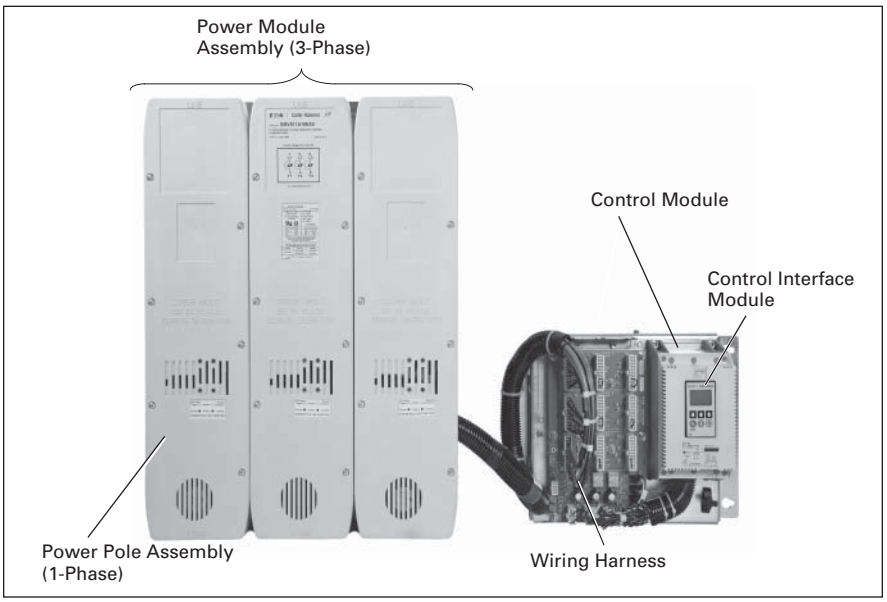

Figure 39-38. Component Identification — MV811 Soft Starter Assembly

Catalog Number Selection

Table 39-88. MV811 Open Soft Starters Catalog Numbering System

SMV 811 A 42 N 3 S

Line
SMV = ***IT***. MV Soft Starter
AMV = Ampgard ***IT***. MV Soft Starter

Model
811 = Non-combination Soft Starter

Frame Size
A = 2,500V
B = 5,000V
C = 7,500V

Ampacity Rating	
37 = 37 amps	**24** = 240 amps
66 = 66 amps	**30** = 300 amps
10 = 105 amps	**36** = 360 amps
13 = 135 amps	**42** = 420 amps
18 = 180 amps	

Options
N = No Options
P = Pump Control

Number of Poles
3 = 3-Pole Device

Style
S = Standard Soft Starter
L = Extended Ramp Start
C = Forced Air Cooling

Product Selection

Horsepower and kW Ratings

Based on standard duty ratings.

Table 39-89. 15 Second Ramp, 4 Starts per Hour, 300% Current Limit @ 40°C — Frames A and B

Frame	Max Current	Three-Phase Motor												Catalog Number	Price U.S. $
		kW Rating (50 – 60 Hertz)						hp Rating (50 – 60 Hertz)							
		2300 Volt	3000 Volt	3300 Volt	3600 Volt	4160 Volt	4800 Volt	2300V 1.15SF	3000V 1.15SF	3300V 1.15SF	3600V 1.15SF	4160V 1.15SF	4800V 1.15SF		
A	37	125	—	—	—	—	—	125	—	—	—	—	—	SMV811A37N3S	
B	37	125	163	200	219	253	261	125	150	200	200	250	300	SMV811B37N3S	
A	66	223	—	—	— 391	—	—	250	—	—	—	—	—	SMV811A66N3S	
B	66	223	291	320		451	521	250	350	400	400	450	500	SMV811B66N3S	
A	105	355	—	—	—	—	—	400	—	—	—	—	—	SMV811A10N3S	
B	105	355	463	510	621	718	828	400	500	600	600	700	800	SMV811B10N3S	
A	135	457	—	—	— 799	—	—1065	500	—	—	—	—	—	SMV811A13N3S	
B	135	457	596	655		923		500	700	800	800	900	1000	SMV811B13N3S	
A	180	609	—	—	—	—	—	700	—	—	—	—	—	SMV811A18N3S	
B	180	609	794	873	1065	1231	1420	700	1000	1000	1100	1200	1400	SMV811B18N3S	
A	240	812	—	—	—	—	—	900	—	—	—	—	—	SMV811A24N3S	
B	240	812	1059	1165	1420	1641	1893	900	1300	1400	1500	1600	1800	SMV811B24N3S	
A	304	1028	—	—	—	—	—	1200	—	—	—	—	—	SMV811A30N3S	
B	304	1028	1341	1475	1799	2087	2398	1200	1600	1800	2000	2000	2300	SMV811B30N3S	
A	360	1218	—	—	—	—	—	1300	—	—	—	—	—	SMV811A36N3S	
B	360	1218	1588	1747	2130	2461	2840	1300	2000	2100	2300	2400	2800	SMV811B36N3S	
A	420	1421	—	—	—	—	—	1600	—	—	—	—	—	SMV811A42N3S	
B	420	1421	1853	2038	2485	2872	3313	1600	2300	2500	2700	2800	3300	SMV811B42N3S	

Table 39-90. 15 Second Ramp, 4 Starts per Hour, 300% Current Limit @ 40°C — Frame C

Max Current	Three-Phase Motor												Catalog Number	Price U.S. $
	kW Rating (50 – 60 Hertz)						hp Rating (50 – 60 Hertz)							
	5500 Volt	6000 Volt	6300 Volt	6600 Volt	6900 Volt	7200 Volt	5500 1.15SF	6000 1.15SF	6300 1.15SF	6600 1.15SF	6900 1.15SF	7200 1.15SF		
37	299	326	343	359	375	392	300	350	350	400	400	400	SMV811C37N3S	
66	534	582	611	641	670	699	500	600	600	700	700	700	SMV811C66N3S	
105	849	926	973	1019	1065	1112	900	1000	1000	1100	1100	1250	SMV811C10N3S	
135	1092	1191	1251	1310	1370	1429	1200	1300	1300	1400	1500	1600	SMV811C13N3S	
180	1456	1588	1668	1747	1862	1906	1600	1700	1800	1900	2000	2100	SMV811C18N3S	
240	1941	2118	2223	2329	2435	2541	2100	2300	2400	2500	2700	2800	SMV811C24N3S	
304	2459	2682	2816	2950	3085	3219	2700	2900	3100	3200	3400	3600	SMV811C30N3S	
360	2912	3176	3335	3494	3653	3812	3200	3500	3700	3800	4000	4200	SMV811C36N3S	
420	3397	3706	3891	4076	4262	4447	3700	4100	4300	4500	4700	5000	SMV811C42N3S	

Discount Symbol **1CD1**

Table 39-91. 25 Second Ramp, 4 Starts per Hour, 300% Current Limit @ 40°C — Frames A and B

Frame	Max Current	Three-Phase Motor												Catalog Number	Price U.S. $
		kW Rating (50 – 60 Hertz)						hp Rating (50 – 60 Hertz)							
		2300 Volt	3000 Volt	3300 Volt	3600 Volt	4160 Volt	4800 Volt	2300V 1.15SF	3000V 1.15SF	3300V 1.15SF	3600V 1.15SF	4160V 1.15SF	4800V 1.15SF		
A	34	115	—	—	—	—	—	125	—	—	—	—	—	SMV811A37N3S	
B	34	115	150	165	180	208	240	125	150	150	200	200	250	SMV811B37N3S	
A	63	213	—	—	—	—	—	200	—	—	—	—	—	SMV811A66N3S	
B	63	213	278	306	334	385	445	200	300	300	350	400	500	SMV811B66N3S	
A	96	325	—	—	—	—	—	350	—	—	—	—	—	SMV811A10N3S	
B	96	325	424	466	508	587	678	350	450	500	500	600	700	SMV811B10N3S	
A	120	406	—	—	—	—	—	450	—	—	—	—	—	SMV811A13N3S	
B	120	406	534	582	635	734	847	450	600	600	700	800	900	SMV811B13N3S	
A	150	507	—	—	—	—	—	500	—	—	—	—	—	SMV811A18N3S	
B	150	507	662	728	794	918	1059	500	700	800	800	1000	1100	SMV811B18N3S	
A	215	727	—	—	—	—	—	800	—	—	—	—	—	SMV811A24N3S	
B	215	727	948	1043	1138	1315	1518	800	1000	1100	1250	1400	1600	SMV811B24N3S	
A	278	940	—	—	—	—	—	1000	—	—	—	—	—	SMV811A30N3S	
B	278	940	1226	1349	1472	1701	1962	1000	1300	1500	1600	1900	2100	SMV811B30N3S	
A	320	1082	—	—	—	—	—	1200	—	—	—	—	—	SMV811A36N3S	
B	320	1082	1412	1553	1694	1958	2259	1200	1700	1700	1800	2200	2500	SMV811B36N3S	
A	380	1285	—	—	—	—	—	1400	—	—	—	—	—	SMV811A42N3S	
B	380	1285	1676	1844	2012	2325	2682	1400	2000	2000	2200	2600	2900	SMV811B42N3S	

Table 39-92. 25 Second Ramp, 4 Starts per Hour, 300% Current Limit @ 40°C — Frame C

Max Current	Three-Phase Motor												Catalog Number	Price U.S. $
	kW Rating (50 – 60 Hertz)						hp Rating (50 – 60 Hertz)							
	5500 Volt	6000 Volt	6300 Volt	6600 Volt	6900 Volt	7200 Volt	5500 1.15SF	6000 1.15SF	6300 1.15SF	6600 1.15SF	6900 1.15SF	7200 1.15SF		
34	275	300	315	330	345	360	300	300	350	350	350	400	SMV811C37N3S	
63	510	556	584	611	639	667	500	600	600	600	700	700	SMV811C66N3S	
96	776	847	889	932	974	1016	800	900	900	1000	1000	1100	SMV811C10N3S	
120	971	1059	1112	1165	1218	1271	1000	1100	1200	1300	1300	1400	SMV811C13N3S	
150	1213	1323	1390	1456	1522	1588	1300	1400	1500	1600	1600	1700	SMV811C18N3S	
215	1739	1897	1992	2087	2181	2276	1900	2100	2200	2300	2400	2500	SMV811C24N3S	
278	2248	2453	2575	2698	2821	2943	2500	2700	2800	3000	3100	3300	SMV811C30N3S	
320	2588	2823	2965	3106	3247	3388	2800	3100	3300	3400	3600	3800	SMV811C36N3S	
380	3073	3353	3520	3688	2856	4023	3400	3700	3900	4100	4200	4500	SMV811C42N3S	

Discount Symbol **1CD1**

Table 39-93. 15 Second Ramp, 4 Starts per Hour, 300% Current Limit @ 50°C — Frames A and B

Frame	Max Current	Three-Phase Motor												Catalog Number	Price U.S. $
		kW Rating (50 – 60 Hertz)						hp Rating (50 – 60 Hertz)							
		2300 Volt	3000 Volt	3300 Volt	3600 Volt	4160 Volt	4800 Volt	2300V 1.15SF	3000V 1.15SF	3300V 1.15SF	3600V 1.15SF	4160V 1.15SF	4800V 1.15SF		
A	34	115	—	—	—	—	—	125	—	—	—	—	—	SMV811A37N3S	
B	34	115	150	165	180	180	240	125	150	150	200	200	250	SMV811B37N3S	
A	63	213	—	—	—	—	—	200	—	—	—	—	—	SMV811A66N3S	
B	63	213	278	306	334	334	445	200	300	300	350	350	500	SMV811B66N3S	
A	96	325	—	—	—	—	—	350	—	—	—	—	—	SMV811A10N3S	
B	96	325	424	466	508	508	678	350	450	500	500	500	700	SMV811B10N3S	
A	120	406	—	—	—	—	—	450	—	—	—	—	—	SMV811A13N3S	
B	120	406	529	582	635	635	847	450	600	600	700	700	900	SMV811B13N3S	
A	150	507	—	—	—	—	—	500	—	—	—	—	—	SMV811A18N3S	
B	150	507	662	728	794	794	1059	500	700	800	800	800	1100	SMV811B18N3S	
A	215	727	—	—	—	—	—	800	—	—	—	—	—	SMV811A24N3S	
B	215	727	948	1043	1138	1138	1518	800	1000	1100	1250	1250	1600	SMV811B24N3S	
A	278	940	—	—	—	—	—	1000	—	—	—	—	—	SMV811A30N3S	
B	278	940	1226	1349	1472	1472	1962	1000	1300	1500	1600	1600	2100	SMV811B30N3S	
A	320	1082	—	—	—	—	—	1200	—	—	—	—	—	SMV811A36N3S	
B	320	1082	1412	1553	1694	1694	2259	1200	1500	1700	1800	1800	2500	SMV811B36N3S	
A	380	1285	—	—	—	—	—	1400	—	—	—	—	—	SMV811A42N3S	
B	380	1285	1676	1844	2012	2012	2682	1400	1800	2000	2200	2200	2900	SMV811B42N3S	

Table 39-94. 15 Second Ramp, 4 Starts per Hour, 300% Current Limit @ 50°C — Frame C

Max Current	Three-Phase Motor												Catalog Number	Price U.S. $
	kW Rating (50 – 60 Hertz)						hp Rating (50 – 60 Hertz)							
	5500 Volt	6000 Volt	6300 Volt	6600 Volt	6900 Volt	7200 Volt	5500 1.15SF	6000 1.15SF	6300 1.15SF	6600 1.15SF	6900 1.15SF	7200 1.15SF		
34	257	300	315	330	345	360	300	300	350	350	350	400	SMV811C37N3S	
63	510	556	584	611	639	667	500	600	600	600	700	700	SMV811C66N3S	
96	776	847	889	932	974	1016	800	900	900	1000	1000	1100	SMV811C10N3S	
120	971	1059	1112	1165	1218	1271	1000	1100	1200	1300	1300	1400	SMV811C13N3S	
150	1213	1323	1390	1456	1522	1588	1300	1400	1500	1600	1600	1700	SMV811C18N3S	
215	1739	1897	1992	2087	2181	2276	1900	2100	2200	2300	2400	2500	SMV811C24N3S	
278	2248	2453	2575	2698	2821	2943	2500	2700	2800	3000	3100	3300	SMV811C30N3S	
320	2588	2823	2965	3106	3247	3388	2800	3100	3300	3400	3600	3800	SMV811C36N3S	
380	3073	3353	3520	3688	3856	4023	3400	3700	3900	4100	4200	4500	SMV811C42N3S	

Discount Symbol **1CD1**

Table 39-95. 50 Second Ramp, 2 Starts per Hour, 300% Current Limit @ 50°C — Frames A and B

Frame	Max Current	Three-Phase Motor												Catalog Number	Price U.S. $
		kW Rating (50 – 60 Hertz)						hp Rating (50 – 60 Hertz)							
		2300 Volt	3000 Volt	3300 Volt	3600 Volt	4160 Volt	4800 Volt	2300V 1.15SF	3000V 1.15SF	3300V 1.15SF	3600V 1.15SF	4160V 1.15SF	4800V 1.15SF		
A	21	—	—	—	—	—	—	—	—	—	—	—	—	SMV811A37N3S	
B	21	—	—	—	111	128	148	—	—	—	125	125	150	SMV811B37N3S	
A	42	142	—	—	—	—	—	150	—	—	—	—	—	SMV811A66N3S	
B	42	142	185	204	222	257	296	150	200	200	250	250	300	SMV811B66N3S	
A	60	203	—	—	—	—	—	250	—	—	—	—	—	SMV811A10N3S	
B	60	203	265	291	318	367	424	250	300	300	350	400	450	SMV811B10N3S	
A	80	271	—	—	—	—	—	300	—	—	—	—	—	SMV811A13N3S	
B	80	271	353	388	424	489	565	300	400	400	450	500	600	SMV811B13N3S	
A	115	389	—	—	—	—	—	400	—	—	—	—	—	SMV811A18N3S	
B	115	389	507	558	609	703	812	400	500	600	600	800	900	SMV811B18N3S	
A	150	507	—	—	—	—	—	500	—	—	—	—	—	SMV811A24N3S	
B	150	507	662	728	794	918	1059	500	700	800	800	1000	1100	SMV811B24N3S	
A	192	649	—	—	—	—	—	700	—	—	—	—	—	SMV811A30N3S	
B	192	649	847	935	1016	1175	1355	700	900	1000	1100	1300	1500	SMV811B30N3S	
A	280	947	—	—	—	—	—	1000	—	—	—	—	—	SMV811A36N3S	
B	280	947	1235	1359	1482	1713	1976	1000	1300	1500	1600	1900	2200	SMV811B36N3S	
A	340	1150	—	—	—	—	—	1300	—	—	—	—	—	SMV811A42N3S	
B	340	1150	1500	1650	1800	2080	2400	1300	1600	1800	2000	2300	2600	SMV811B42N3S	

Table 39-96. 50 Second Ramp, 2 Starts per Hour, 300% Current Limit @ 50°C — Frame C

Max Current	Three-Phase Motor												Catalog Number	Price U.S. $
	kW Rating (50 – 60 Hertz)						hp Rating (50 – 60 Hertz)							
	5500 Volt	6000 Volt	6300 Volt	6600 Volt	6900 Volt	7200 Volt	5500 1.15SF	6000 1.15SF	6300 1.15SF	6600 1.15SF	6900 1.15SF	7200 1.15SF		
21	170	185	195	204	213	222	150	200	200	200	200	250	SMV811C37N3S	
42	340	371	389	408	426	445	350	400	400	450	450	500	SMV811C66N3S	
60	485	529	556	582	609	635	500	500	600	600	600	700	SMV811C10N3S	
80	647	706	741	776	812	847	700	700	800	800	900	900	SMV811C13N3S	
115	930	1015	1065	1116	1167	1218	1000	1100	1100	1200	1300	1300	SMV811C18N3S	
150	1213	1323	1390	1456	1522	1588	1300	1400	1500	1600	1600	1700	SMV811C24N3S	
192	1553	1694	1779	1863	1948	2033	1700	1800	1900	2000	2100	2200	SMV811C30N3S	
280	2265	2470	2594	2717	2841	2965	2500	2700	2800	3000	3100	3300	SMV811C36N3S	
340	2750	3000	3150	3300	3450	3600	3000	3300	3500	3600	3800	4000	SMV811C42N3S	

Discount Symbol **1CD1**

Table 39-97. 15 Second Ramp, 4 Starts per Hour, 450% Current Limit @ 40°C — Frames A and B

Frame	Max Current	Three-Phase Motor												Catalog Number	Price U.S. $
		kW Rating (50 – 60 Hertz)						hp Rating (50 – 60 Hertz)							
		2300 Volt	3000 Volt	3300 Volt	3600 Volt	4160 Volt	4800 Volt	2300V 1.15SF	3000V 1.15SF	3300V 1.15SF	3600V 1.15SF	4160V 1.15SF	4800V 1.15SF		
A	29	—	—	—	—	—	—	—	—	—	—	—	—	SMV811A37N3S	
B	29	—	128	141	154	177	205	—	150	150	150	200	200	SMV811B37N3S	
A	49	166	—	—	—	—	—	150	—	—	—	—	—	SMV811A66N3S	
B	49	166	216	238	259	300	346	150	250	250	250	300	350	SMV811B66N3S	
A	73	247	—	—	—	—	—	250	—	—	—	—	—	SMV811A10N3S	
B	73	247	322	359	386	447	515	250	350	400	400	500	500	SMV811B10N3S	
A	94	318	—	—	—	—	—	350	—	—	—	—	—	SMV811A13N3S	
B	94	318	415	456	498	575	663	350	450	500	500	600	700	SMV811B13N3S	
A	155	524	—	—	—	—	—	500	—	—	—	—	—	SMV811A18N3S	
B	155	524	684	752	821	948	1094	500	700	800	900	1000	1200	SMV811B18N3S	
A	219	741	—	—	—	—	—	800	—	—	—	—	—	SMV811A24N3S	
B	219	741	966	1063	1159	1340	1546	800	1000	1100	1250	1500	1700	SMV811B24N3S	
A	280	947	—	—	—	—	—	1000	—	—	—	—	—	SMV811A30N3S	
B	280	947	1235	1359	1482	1713	1976	1000	1300	1500	1600	1900	2200	SMV811B30N3S	
A	345	1167	—	—	—	—	—	1300	—	—	—	—	—	SMV811A36N3S	
B	345	1167	1522	1674	1826	2110	2435	1300	1700	1800	2000	2300	2700	SMV811B36N3S	
A	405	1370	—	—	—	—	—	1500	—	—	—	—	—	SMV811A42N3S	
B	405	1370	1787	1965	2144	2477	2859	1500	2000	2100	2300	2800	3100	SMV811B42N3S	

Table 39-98. 15 Second Ramp, 4 Starts per Hour, 450% Current Limit @ 40°C — Frame C

Max Current	Three-Phase Motor												Catalog Number	Price U.S. $
	kW Rating (50 – 60 Hertz)						hp Rating (50 – 60 Hertz)							
	5500 Volt	6000 Volt	6300 Volt	6600 Volt	6900 Volt	7200 Volt	5500 1.15SF	6000 1.15SF	6300 1.15SF	6600 1.15SF	6900 1.15SF	7200 1.15SF		
29	235	256	269	281	294	307	250	250	300	300	300	350	SMV811C37N3S	
49	396	432	454	476	497	519	400	450	500	500	500	500	SMV811C66N3S	
73	590	644	676	708	741	773	600	700	700	700	800	800	SMV811C10N3S	
94	760	829	871	912	954	995	800	900	900	1000	1000	1100	SMV811C13N3S	
155	1254	1368	1436	1504	1573	1641	1300	1500	1600	1600	1600	1800	SMV811C18N3S	
219	1771	1932	2029	2125	2222	[?]	1900	2100	2200	2300	2400	2600	SMV811C24N3S	
280	2265	2470	2594	2717	2841	3300	2500	2700	2800	3000	3100	3300	SMV811C30N3S	
345	2790	3044	3196	3348	3501	4100	3100	3300	3500	3700	3800	4100	SMV811C36N3S	
405	3276	3573	4100	3931	4109	4800	3600	3900	4100	4300	4500	4800	SMV811C42N3S	

Discount Symbol **1CD1**

Table 39-99. 30 Second Ramp, 4 Starts per Hour, 450% Current Limit @ 40°C — Frames A and B

Frame	Max Current	Three-Phase Motor												Catalog Number	Price U.S. $
		kW Rating (50 – 60 Hertz)						hp Rating (50 – 60 Hertz)							
		2300 Volt	3000 Volt	3300 Volt	3600 Volt	4160 Volt	4800 Volt	2300V 1.15SF	3000V 1.15SF	3300V 1.15SF	3600V 1.15SF	4160V 1.15SF	4800V 1.15SF		
A	21	—	—	—	—	—	—	—	—	—	—	—	—	SMV811A37N3S	
B	21	—	—	—	111	128	148	—	—	—	125	125	150	SMV811B37N3S	
A	40	135	—	—	—	—	—	150	—	—	—	—	—	SMV811A66N3S	
B	40	135	176	194	212	245	282	150	200	200	200	250	300	SMV811B66N3S	
A	55	186	—	—	—	—	—	200	—	—	—	—	—	SMV811A10N3S	
B	55	186	243	267	291	336	388	200	250	300	300	350	400	SMV811B10N3S	
A	75	254	—	—	—	—	—	250	—	—	—	—	—	SMV811A13N3S	
B	75	254	331	364	397	459	529	250	350	400	450	500	600	SMV811B13N3S	
A	151	511	—	—	—	—	—	500	—	—	—	—	—	SMV811A18N3S	
B	151	511	666	733	799	924	1066	500	700	800	800	1000	1100	SMV811B18N3S	
A	215	727	—	—	—	—	—	800	—	—	—	—	—	SMV811A24N3S	
B	215	727	948	1043	1138	1315	1518	800	1000	1100	1250	1400	1600	SMV811B24N3S	
A	264	893	—	—	—	—	—	1000	—	—	—	—	—	SMV811A30N3S	
B	264	893	1165	1281	1398	1615	1863	1000	1300	1400	1500	1800	2000	SMV811B30N3S	
A	300	1015	—	—	—	—	—	1100	—	—	—	—	—	SMV811A36N3S	
B	300	1015	1323	1456	1588	1835	2118	1100	1400	1600	1700	2000	2300	SMV811B36N3S	
A	340	1150	—	—	—	—	—	1300	—	—	—	—	—	SMV811A42N3S	
B	340	1150	1500	1650	1800	2080	2400	1300	1600	1800	2000	2300	2600	SMV811B42N3S	

Table 39-100. 30 Second Ramp, 4 Starts per Hour, 450% Current Limit @ 40°C — Frame C

Max Current	Three-Phase Motor												Catalog Number	Price U.S. $
	kW Rating (50 – 60 Hertz)						hp Rating (50 – 60 Hertz)							
	5500 Volt	6000 Volt	6300 Volt	6600 Volt	6900 Volt	7200 Volt	5500 1.15SF	6000 1.15SF	6300 1.15SF	6600 1.15SF	6900 1.15SF	7200 1.15SF		
21	170	185	195	204	213	213	150	200	200	200	200	200	SMV811C37N3S	
40	324	353	371	388	406	406	350	350	400	400	450	450	SMV811C66N3S	
55	445	485	510	534	558	558	450	500	500	500	600	600	SMV811C10N3S	
75	607	662	695	728	761	761	600	700	700	800	800	800	SMV811C13N3S	
151	1221	1332	1399	1466	1532	1532	1300	1400	1500	1600	1700	1700	SMV811C18N3S	
215	1739	1897	1992	2087	2181	2181	1900	2100	2200	2300	2400	2400	SMV811C24N3S	
264	2135	2329	2446	2563	2679	2679	2300	2500	2700	2800	2900	2900	SMV811C30N3S	
300	2426	2647	2779	2912	3044	3044	2700	2900	3000	3200	3300	3300	SMV811C36N3S	
340	2750	3000	3150	3300	3450	3450	3000	3300	3500	3600	3800	3800	SMV811C42N3S	

Discount Symbol **1CD1**

Table 39-101. >30 Second Ramp, >4 Starts per Hour or >300% Current Limit — Frames A and B

Frame	Max Current	Three-Phase Motor												Catalog Number	Price U.S. $
		kW Rating (50 – 60 Hertz)						hp Rating (50 – 60 Hertz)							
		2300 Volt	3000 Volt	3300 Volt	3600 Volt	4160 Volt	4800 Volt	2300V 1.15SF	3000V 1.15SF	3300V 1.15SF	3600V 1.15SF	4160V 1.15SF	4800V 1.15SF		
A	22	—	—	—	—	—	—	—	—	—	—	—	—	SMV811A37N3S	
B	22	—	—	107	116	135	155	—	—	125	125	150	150	SMV811B37N3S	
A	42	142	—	—	—	—	—	150	—	—	—	—	—	SMV811A66N3S	
B	42	142	185	204	222	257	296	150	200	200	200	250	300	SMV811B66N3S	
A	65	220	—	—	—	—	—	250	—	—	—	—	—	SMV811A10N3S	
B	65	220	278	315	344	398	495	250	300	350	350	400	500	SMV811B10N3S	
A	80	271	—	—	—	—	—	300	—	—	—	—	—	SMV811A13N3S	
B	80	271	353	388	424	489	565	300	400	400	450	500	600	SMV811B13N3S	
A	115	389	—	—	—	—	—	400	—	—	—	—	—	SMV811A18N3S	
B	115	389	507	558	609	703	812	400	500	600	600	800	900	SMV811B18N3S	
A	150	507	—	—	—	—	—	500	—	—	—	—	—	SMV811A24N3S	
B	150	507	662	728	794	918	1059	500	700	800	800	1000	1100	SMV811B24N3S	
A	192	649	—	—	—	—	—	700	—	—	—	—	—	SMV811A30N3S	
B	192	649	847	932	1016	1175	1355	700	900	1000	1100	1300	1500	SMV811B30N3S	
A	240	812	—	—	—	—	—	900	—	—	—	—	—	SMV811A36N3S	
B	240	812	1059	1165	1271	1468	1694	900	1200	1300	1400	1600	1800	SMV811B36N3S	
A	305	1032	—	—	—	—	—	1100	—	—	—	—	—	SMV811A42N3S	
B	305	1032	1346	1480	1615	1866	2153	1100	1500	1600	1800	2100	2400	SMV811B42N3S	

Table 39-102. >30 Second Ramp, >4 Starts per Hour or >300% Current Limit — Frame C

Max Current	Three-Phase Motor												Catalog Number	Price U.S. $
	kW Rating (50 – 60 Hertz)						hp Rating (50 – 60 Hertz)							
	5500 Volt	6000 Volt	6300 Volt	6600 Volt	6900 Volt	7200 Volt	5500 1.15SF	6000 1.15SF	6300 1.15SF	6600 1.15SF	6900 1.15SF	7200 1.15SF		
22	178	194	204	214	223	233	200	200	200	200	250	250	SMV811C37N3S	
42	340	371	389	408	426	445	350	400	400	450	450	500	SMV811C66N3S	
65	526	573	602	631	660	688	500	600	600	700	700	700	SMV811C10N3S	
80	647	705	741	776	812	847	600	700	800	800	900	900	SMV811C13N3S	
115	930	1015	1065	1116	1167	1218	1000	1100	1100	1200	1300	1300	SMV811C18N3S	
150	1213	1323	1390	1456	1522	1588	1300	1400	1500	1600	1600	1700	SMV811C24N3S	
192	1553	1694	1779	1863	1948	2033	1700	1800	1900	2000	2100	2200	SMV811C30N3S	
240	1941	2118	2223	2329	2435	2541	2100	2300	2400	2500	2700	2800	SMV811C36N3S	
305	2467	2691	2826	3200	3096	3229	2700	2900	3100	3200	3400	3600	SMV811C42N3S	

Discount Symbol **1CD1**

Options

Extended Ramp

For a longer ramp acceleration time of 1.0 – 360 seconds, change the 12th digit in the Catalog Number from **Page 39-67** to **L** (i.e. SMV811A42N3**L**).

Table 39-103. Extended Ramp

Max. Voltage	Max. Current Rating	Catalog Number	Price U.S. $
A-Frame			
2,500	37	**SMV811A37N3L**	
	66	**SMV811A66N3L**	
	105	**SMV811A10N3L**	
	135	**SMV811A13N3L**	
	180	**SMV811A18N3L**	
	240	**SMV811A24N3L**	
	304	**SMV811A30N3L**	
	360	**SMV811A36N3L**	
	420	**SMV811A42N3L**	
B-Frame			
5,000	37	**SMV811B37N3L**	
	66	**SMV811B66N3L**	
	105	**SMV811B10N3L**	
	135	**SMV811B13N3L**	
	180	**SMV811B18N3L**	
	240	**SMV811B24N3L**	
	304	**SMV811B30N3L**	
	360	**SMV811B36N3L**	
	420	**SMV811B42N3L**	
C-Frame			
7,500	37	**SMV811C37N3L**	
	66	**SMV811C66N3L**	
	105	**SMV811C10N3L**	
	135	**SMV811C13N3L**	
	180	**SMV811C18N3L**	
	240	**SMV811C24N3L**	
	304	**SMV811C30N3L**	
	360	**SMV811C36N3L**	
	420	**SMV811C42N3L**	

Pump Control

For a pump control option, change the 10th digit in the Catalog Number from **Page 39-67** to **P** (i.e. SMV811A42**P**3S).

Table 39-104. Pump Control

Max. Voltage	Max. Current Rating	Catalog Number	Price U.S. $
A-Frame			
2,500	37	**SMV811A37P3S**	
	66	**SMV811A66P3S**	
	105	**SMV811A10P3S**	
	135	**SMV811A13P3S**	
	180	**SMV811A18P3S**	
	240	**SMV811A24P3S**	
	304	**SMV811A30P3S**	
	360	**SMV811A36P3S**	
	420	**SMV811A42P3S**	
B-Frame			
5,000	37	**SMV811B37P3S**	
	66	**SMV811B66P3S**	
	105	**SMV811B10P3S**	
	135	**SMV811B13P3S**	
	180	**SMV811B18P3S**	
	240	**SMV811B24P3S**	
	304	**SMV811B30P3S**	
	360	**SMV811B36P3S**	
	420	**SMV811B42P3S**	
C-Frame			
7,500	37	**SMV811C37P3S**	
	66	**SMV811C66P3S**	
	105	**SMV811C10P3S**	
	135	**SMV811C13P3S**	
	180	**SMV811C18P3S**	
	240	**SMV811C24P3S**	
	304	**SMV811C30P3S**	
	360	**SMV811C36P3S**	
	420	**SMV811C42P3S**	

Discount Symbol **1CD1**

Power Pole Forced Air Cooling

Power pole forced air cooling option includes internal fans to cool power poles. For use in high ambient temperature, high duty cycle, and/or long ramp applications. For power pole forced air cooling, change the 12th digit in the Catalog Number from **Page 39-67** to a **C** (i.e. SMV811A42N3**C**).

Table 39-105. Forced Air Cooling

Max. Voltage	Max. Current Rating	Catalog Number	Price U.S. $
A-Frame			
2,500	37	**SMV811A37N3C**	
	66	**SMV811A66N3C**	
	105	**SMV811A10N3C**	
	135	**SMV811A13N3C**	
	180	**SMV811A18N3C**	
	240	**SMV811A24N3C**	
	304	**SMV811A30N3C**	
	360	**SMV811A36N3C**	
	420	**SMV811A42N3C**	
B-Frame			
5,000	37	**SMV811B37N3C**	
	66	**SMV811B66N3C**	
	105	**SMV811B10N3C**	
	135	**SMV811B13N3C**	
	180	**SMV811B18N3C**	
	240	**SMV811B24N3C**	
	304	**SMV811B30N3C**	
	360	**SMV811B36N3C**	
	420	**SMV811B42N3C**	
C-Frame			
7,500	37	**SMV811C37N3C**	
	66	**SMV811C66N3C**	
	105	**SMV811C10N3C**	
	135	**SMV811C13N3C**	
	180	**SMV811C18N3C**	
	240	**SMV811C24N3C**	
	304	**SMV811C30N3C**	
	360	**SMV811C36N3C**	
	420	**SMV811C42N3C**	

Accessories

User Manual

Comprehensive instruction manual. This publication can be downloaded for free from www.eaton.com by performing a "Document Search" for MN03902010E.

Roll Out Truck

Roll Out Truck

Provide horizontal mounting for up to 2 power pole assemblies (4,160V). Line and load stabs provide easy power wiring connections to Ampgard bus. Consult factory for more information.

Power Pole Cooling Kit

Optional lug covers with two internal fans per pole allow force air cooling of power poles. For use in high ambient temperature, high duty cycle and/or long ramp applications.

Table 39-106. Power Pole Cooling Kit

Description	Catalog Number	Price U.S. $
Cooling Kit	**MW02A**	

Discount Symbol **1CD1**

Terminal Pad Kits

The soft starter power modules are supplied without terminal pads. Terminal pads are fastened to the soft starter power bus and provide a threaded hole for customer connection. Kits are available to accept either a bus bar or a ring terminal connection. Each kit includes instructions, three terminal pads, hardware to fasten to either the line or line side power bus, and hardware for customer connections.

Terminal Pad Kit

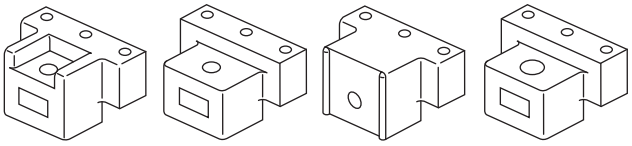

MW01A Terminal Pad *MW01B Terminal Pad* *MW01C Terminal Pad* *MW01D Terminal Pad*

Table 39-107. Terminal Pad Kits

Description	Conductor Type	Catalog Number	Price U.S. $
Terminal pad kit to accept 3/8-16 bolt, 1.12 inch max ring tang (28.5 mm)	Ring lug	**MW01A**	
Terminal pad kit to accept 3/8-16 bolt, 2.0 inch max width bus bar (50.8 mm) horizontal	Bus bar	**MW01B**	
Terminal pad kit to accept 3/8-16 bolt, 1.5 inch max width bus bar (38.1 mm) vertical	Bus bar	**MW01C**	
Terminal pad kit to accept 1/2-13 bolt, 2.0 inch max width bus bar (50.8 mm) horizontal	Bus bar	**MW01D**	

Remote DIM (Digital Interface Module) Mounting Kit

Used to door mount the control interface module. Does not include the DIM.

Table 39-108. Remote DIM Mounting Kit

Description	Catalog Number	Price U.S. $
Remote mounting kit with 3 ft. cable	**EMA69A**	
Remote mounting kit with 5 ft. cable	**EMA69B**	
Remote mounting kit with 8 ft. cable	**EMA69C**	
Remote mounting kit with 10 ft. cable	**EMA69D**	

Table 39-109. MV811 Accessory Kits

Common Name	Notes	Catalog Number	Price U.S. $
Arrestor Kit	2.5 kV (contains 3 Arrestors with Mounting bracket and hardware)	**MW03A**	
	5 kV (contains 3 Arrestors with Mounting bracket and hardware)	**MW03B**	
	7.2 kV (contains 3 Arrestors with Mounting bracket and hardware)	**MW03C**	
Power Supply	2.5 kV (110 — 240V AC Input)	**PSS300E** ①	
	2.5 kV (380 — 480V AC Input)	**PSS600C** ①	
	5 kV (380 — 480V AC Input)	**PSS600C** ①	
	7.2 kV (380 — 480V AC Input)	**PSS600C** ①	
Lifting Kit	Used to lift device out of packaging box.	**MW04A**	

① A minimum wire size of 14 AWG (2.5 mm2) should be used between the power supply and the 24V DC +/- terminals.

Discount Symbol **1CD1**

Renewal Parts

Table 39-110. MV811 Repair Parts

Common Name	Catalog Number	Price U.S. $
Driver PCB	**SMV811-MY05B**	
Harness board ASSY	**SMV811-MZ01A**	
Power pole assembly — 2500V; 37 Amp	**SMV811-MY37A**	
Power pole assembly — 2500V; 66 Amp	**SMV811-MY66A**	
Power pole assembly — 2500V; 105 Amp	**SMV811-MY10A**	
Power pole assembly — 2500V; 135 Amp	**SMV811-MY13A**	
Power pole assembly — 2500V; 180 Amp	**SMV811-MY18A**	
Power pole assembly — 2500V; 240 Amp	**SMV811-MY24A**	
Power pole assembly — 2500V; 304 Amp	**SMV811-MY30A**	
Power pole assembly — 2500V; 360 Amp	**SMV811-MY36A**	
Power pole assembly — 2500V; 420 Amp	**SMV811-MY42A**	
Power pole assembly — 5000V; 37 Amp	**SMV811-MY37B**	
Power pole assembly — 5000V; 66 Amp	**SMV811-MY66B**	
Power pole assembly — 5000V; 105 Amp	**SMV811-MY10B**	
Power pole assembly — 5000V; 135 Amp	**SMV811-MY13B**	
Power pole assembly — 5000V; 180 Amp	**SMV811-MY18B**	
Power pole assembly — 5000V; 240 Amp	**SMV811-MY24B**	
Power pole assembly — 5000V; 304 Amp	**SMV811-MY30B**	
Power pole assembly — 5000V; 360 Amp	**SMV811-MY36B**	
Power pole assembly — 5000V; 420 Amp	**SMV811-MY42B**	
Power pole assembly — 7200V; 37 Amp	**SMV811-MY37C**	
Power pole assembly — 7200V; 66 Amp	**SMV811-MY66C**	
Power pole assembly — 7200V; 105 Amp	**SMV811-MY10C**	
Power pole assembly — 7200V; 135 Amp	**SMV811-MY13C**	
Power pole assembly — 7200V; 180 Amp	**SMV811-MY18C**	
Power pole assembly — 7200V; 240 Amp	**SMV811-MY24C**	
Power pole assembly — 7200V; 304 Amp	**SMV811-MY30C**	
Power pole assembly — 7200V; 360 Amp	**SMV811-MY36C**	
Power pole assembly — 7200V; 420 Amp	**SMV811-MY42C**	
DIM (Ctrl. User Interface w/SS Spec.)	**EMA91**	
DIM Cable	**MX02A**	
Strain Relief (power pole)	**MX03A**	
Power pole top cover (MV Cover Assy.)	**SMV811-MZ14B**	
Terminal block (Female – 12 pin connector)	**EMA75L**	
Blower ①	**MY14B**	
Harness Kits OEM Controller MV811	**SMV811-MY03D**	
Harness Kits AG Controller AMV811A	**SMV811-MY03A**	
Harness Kits AG Controller AMV811B	**SMV811-MY03B**	
Harness Kits AG Controller AMV811C	**SMV811-MY03C**	
Lug Cover Kit, Line or Load	**SMV811-MX01B**	

① Blower w/hardware and gaskets.

Standards and Certifications

- UL 347
- UL 508
- CSA C22.2 no. 14-95 in conjunction with T.I.L no. D-21 issued 2-8-95
- IEC 68-2-30 (dampheat)
- Solid-State Starters

Instructional Leaflets

MN03902010E User Manual
IL03902202E Installation Leaflet

Discount Symbol **1CD1**

Technical Data and Specifications

Table 39-111. A-Frame — 2,500V AC

Soft Starter (Partial Catalog Number)	SMV811 A37	SMV811 A66	SMV811 A10	SMV811 A13	SMV811 A18	SMV811 A24	SMV811 A30	SMV811 A36	SMV811 A42
Ratings									
Max. Current	37	66	105	135	180	240	304	360	420
Max. Voltage	2,500	2,500	2,500	2,500	2,500	2,500	2,500	2,500	2,500
FLA Current Range	11 – 37	20 – 66	32 – 105	42 – 135	56 – 180	75 – 240	95 – 304	112 – 360	131 – 420
Horsepower Rating @ 60 hz ①	125	250	400	500	700	900	1200	1400	1600
Max. kW Rating @ 50 hz ①	125	223	355	457	609	812	1028	1218	1421
Dimensions — Power Module									
Width in Inches (mm)	17.4 (441.2)								
Height in Inches (mm)	24.2 (613.8)								
Depth in Inches (mm)	9.8 (249.2)								
Weight in Lbs. (kg)	150 (68.3)								
Dimensions — Control Module									
Width in Inches (mm)	4.41 (112.1)								
Height in Inches (mm)	7.83 (199.0)								
Depth in Inches (mm)	3.41 (86.8)								
Weight in Lbs. (kg)	5.8 (2.6)								
General Information									
Bypass Mechanical Life	10M								
Insulating Voltage Ui	2,500								
Ramp Time Range	.5 – 180 Seconds (.5 -360 Seconds Extended Ramp)								
Resistance to Vibration	Operational: 1g in each axis per IEC 68-2-6 Non-operational: 2.5g in each axis per IEC 68-2-6								
Resistance to Shock	Operational: 2.5g in each axis per IEC 68-2-27 Non-operational: 5.5g in each axis per IEC 68-2-27								
Electrical Information									
Operating Voltage	2300								
Operating Frequency	47 – 63 Hz								
Overload Setting	30 – 100%								
Trip Class	5, 10, 20 & 30								
Control Wiring									
Wire Sizes in AWG	22 – 12								
Number of Conductors (Stranded)	2 (or one 14 AWG)								
Torque Requirements in lb-in	3.5								
Solid, Stranded or Flexible Max. (Size in mm^2)	4.0 mm^2								
Control Power Requirements									
Voltage Range (24V ± 1%)	21.6 – 26.4								
Steady State Current Amps	2.3								
Inrush Current Amps	10.5								
Ripple	1%								
Relays (1) Class A and C									
Voltage AC — maximum	240								
Voltage DC — maximum	120								
Amps — maximum	3								
Environment									
Temperature — Operating	-30 – 40°C (No Derating) Consult factory for operation > 40°C								
Temperature — Storage	-50 – 70°C								
Altitude	2,000 meters (without derating) Consult factory for operation > 2,000 meters								
Humidity	< 95% non-condensing								
Operating Position	Any								
Pollution Degree IEC947-1	3								
Impulse withstand Voltage IEC947-4-1	60 kV								

① Based on 300% max. current, 15 second ramp, 4 starts per hour and 40°C ambient temperature.

Table 39-112. B-Frame - 5,000V AC

Soft Starter (Partial Catalog Number)	SMV811 B37	SMV811 B66	SMV811 B10	SMV811 B13	SMV811 B18	SMV811 B24	SMV811 B30	SMV811 B36	SMV811 B42
Ratings									
Max. Current	37	66	105	135	180	240	304	360	420
Max. Voltage	5,000	5,000	5,000	5,000	5,000	5,000	5,000	5,000	5,000
FLA Current Range	11 – 37	20 – 66	32 – 105	42 – 135	56 – 180	75 – 240	95 – 304	112 – 360	131 – 420
Horsepower Rating @ 60 hz ①	300	500	900	1,100	1,500	2,100	2,600	3,100	3,600
Max. kW Rating @ 50 hz ①	292	521	828	1,065	1,420	1,893	3,219	2,840	3,313
Dimensions — Power Module									
Width in Inches (mm)	17.4 (441.2)								
Height in Inches (mm)	48.4 (1227.6)								
Depth in Inches (mm)	9.8 (249.2)								
Weight in Lbs. (kg)	300 (136.6)								
Dimensions — Control Module									
Width in Inches (mm)	4.41 (112.1)								
Height in Inches (mm)	7.83 (199.0)								
Depth in Inches (mm)	3.41 (86.8)								
Weight in Lbs. (kg)	5.8 (2.6)								
General Information									
Bypass Mechanical Life	10M								
Insulating Voltage Ui	5,000								
Ramp Time Range	.5 – 180 Seconds (.5 -360 Seconds Extended Ramp)								
Resistance to Vibration	Operational: 1g in each axis per IEC 68-2-6 Non-operational: 2.5g in each axis per IEC 68-2-6								
Resistance to Shock	Operational: 2.5g in each axis per IEC 68-2-27 Non-operational: 5.5g in each axis per IEC 68-2-27								
Electrical Information									
Operating Voltage	4,800								
Operating Frequency	47 – 63 Hz								
Overload Setting	30 – 100%								
Trip Class	5, 10, 20 & 30								
Control Wiring									
Wire Sizes in AWG	22 – 12								
Number of Conductors (Stranded)	2 (or one 14 AWG)								
Torque Requirements in lb-in	3.5								
Solid, Stranded or Flexible Max. (Size in mm^2)	4.0 mm^2								
Control Power Requirements									
Voltage Range (24V ± 1%)	21.6 – 26.4								
Steady State Current Amps	4.6								
Inrush Current Amps	21								
Ripple	1%								
Relays (1) Class A and C									
Voltage AC — maximum	240								
Voltage DC — maximum	120								
Amps — maximum	3								
Environment									
Temperature — Operating	-30 – 40°C (No Derating) Consult factory for operation > 40°C								
Temperature Storage	-50 – 70°C								
Altitude	2,000 meters (without derating) Consult factory for operation > 2,000 meters								
Humidity	< 95% non-condensing								
Operating Position	Any								
Pollution Degree IEC947-1	3								
Impulse withstand Voltage IEC947-4-1	60 kV								

① Based on 300% max. current, 15 second ramp, 4 starts per hour and 40°C ambient temperature.

Table 39-113. C-Frame - 7,500V AC

Soft Starter (Partial Catalog Number)	SMV811 B37	SMV811 B66	SMV811 B10	SMV811 B13	SMV811 B18	SMV811 B24	SMV811 B30	SMV811 B36	SMV811 B42
Ratings									
Max. Current	37	66	105	135	180	240	304	360	420
Max. Voltage	7,500	7,500	7,500	7,500	7,500	7,500	7,500	7,500	7,500
FLA Current Range	11 – 37	20 – 66	32 – 105	42 – 135	56 – 180	75 – 240	95 – 304	112 – 360	131 – 420
Horsepower Rating @ 60 hz ①	400	700	1,250	1,600	2,100	2,800	3,600	4,200	5,000
Max. kW Rating @ 50 hz ①	392	699	1,112	1,429	1,906	2,541	3,219	3,812	4,447
Dimensions — Power Module									
Width in Inches (mm)	17.4 (441.2)								
Height in Inches (mm)	72.6 (1841.4)								
Depth in Inches (mm)	9.8 (249.2)								
Weight in Lbs. (kg)	450 (204.9)								
Dimensions — Control Module									
Width in Inches (mm)	4.41 (112.1)								
Height in Inches (mm)	7.83 (199.0)								
Depth in Inches (mm)	3.41 (86.8)								
Weight in Lbs. (kg)	5.8 (2.6)								
General Information									
Bypass Mechanical Life	10M								
Insulating Voltage Ui	5,000								
Ramp Time Range	.5 – 180 Seconds (.5 -360 Seconds Extended Ramp)								
Resistance to Vibration	Operational: 1g in each axis per IEC 68-2-6 Non-operational: 2.5g in each axis per IEC 68-2-6								
Resistance to Shock	Operational: 2.5g in each axis per IEC 68-2-27 Non-operational: 5.5g in each axis per IEC 68-2-27								
Electrical Information									
Operating Voltage	Up to 7,500V								
Operating Frequency	47 – 63 Hz								
Overload Setting	30 – 100%								
Trip Class	5, 10, 20 & 30								
Control Wiring									
Wire Sizes in AWG	22 – 14								
Number of Conductors (Stranded)	2 (or one 14 AWG)								
Torque Requirements in lb-in	3.5								
Solid, Stranded or Flexible Max. (Size in mm^2)	4.0 mm^2								
Control Power Requirements									
Voltage Range (24V ± 1%)	21.6 – 26.4								
Steady State Current Amps	6.9								
Inrush Current Amps	31.5								
Ripple	1%								
Relays (1) Class A and C									
Voltage AC — maximum	240								
Voltage DC — maximum	120								
Amps — maximum	3								
Environment									
Temperature — Operating	-30 – 40°C (No Derating) Consult factory for operation > 40°C								
Temperature Storage	-50 – 70°C								
Altitude	2,000 meters (without derating) Consult factory for operation > 2,000 meters								
Humidity	< 95% non-condensing								
Operating Position	Any								
Pollution Degree IEC947-1	3								
Impulse withstand Voltage IEC947-4-1	60 kV								

① Based on 300% max. current, 15 second ramp, 4 starts per hour and 40°C ambient temperature.

Dimensions

SMV811A – 2,500V AC

Applies to SMV, TMV and AMV Catalog prefixes.

The SMV811 can be mounted in any orientation except with the power pole cover facing down.

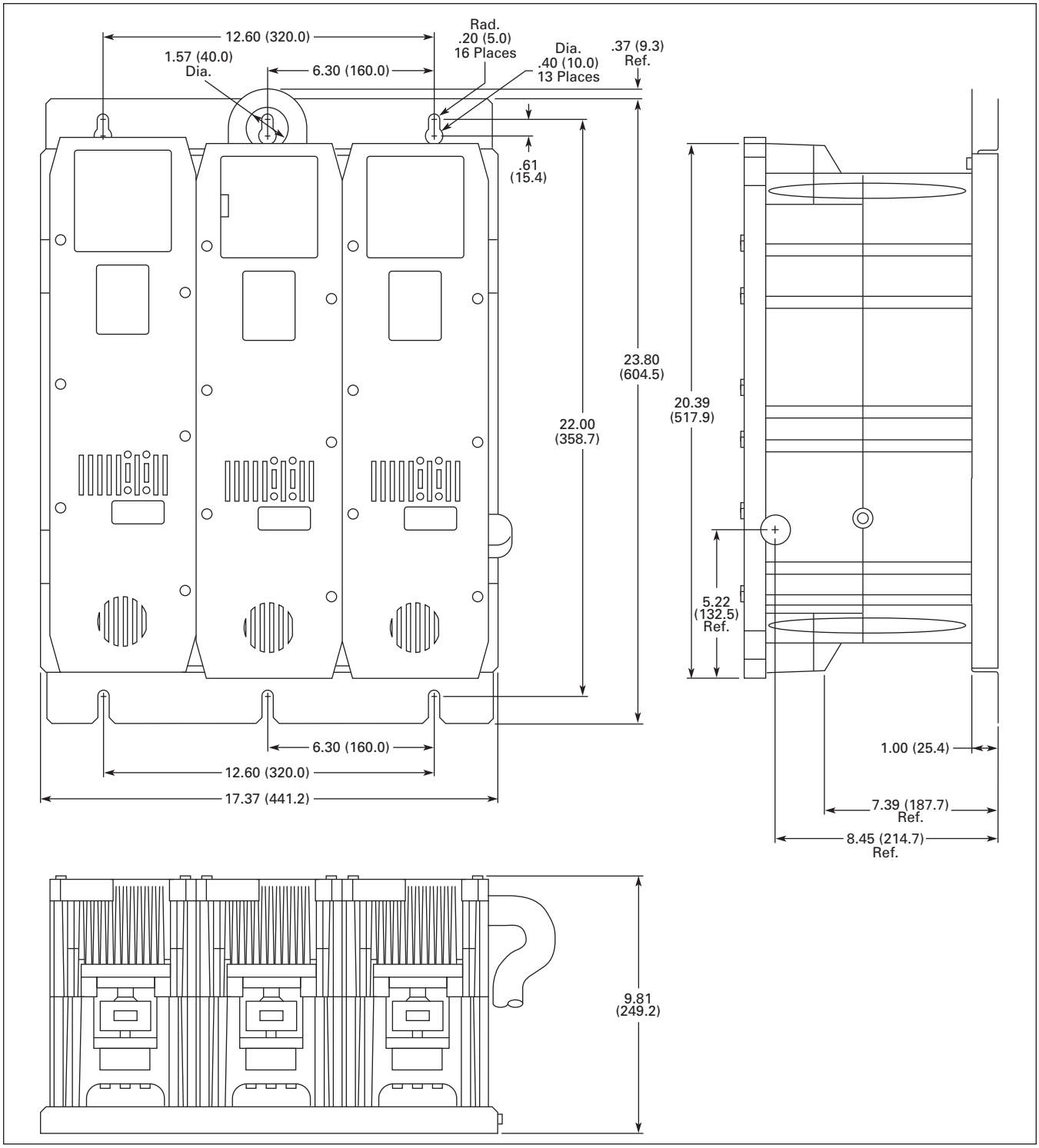

Figure 39-39. SMV811A — 2,500V AC — Approximate Dimensions in Inches (mm)

SMV811B – 5,000V AC

Applies to SMV, TMV and AMV Catalog prefixes.

The SMV811B consists of two power module assemblies that are wired in series. Unit 1 is always wired on the load side, unit 2 is always wired on the line side. The two power module assemblies can be mounted in a variety of configurations as long as the minimum spacing between units is observed. Some examples are shown in **Figures 39-40 – 39-42**.

Configuration 1

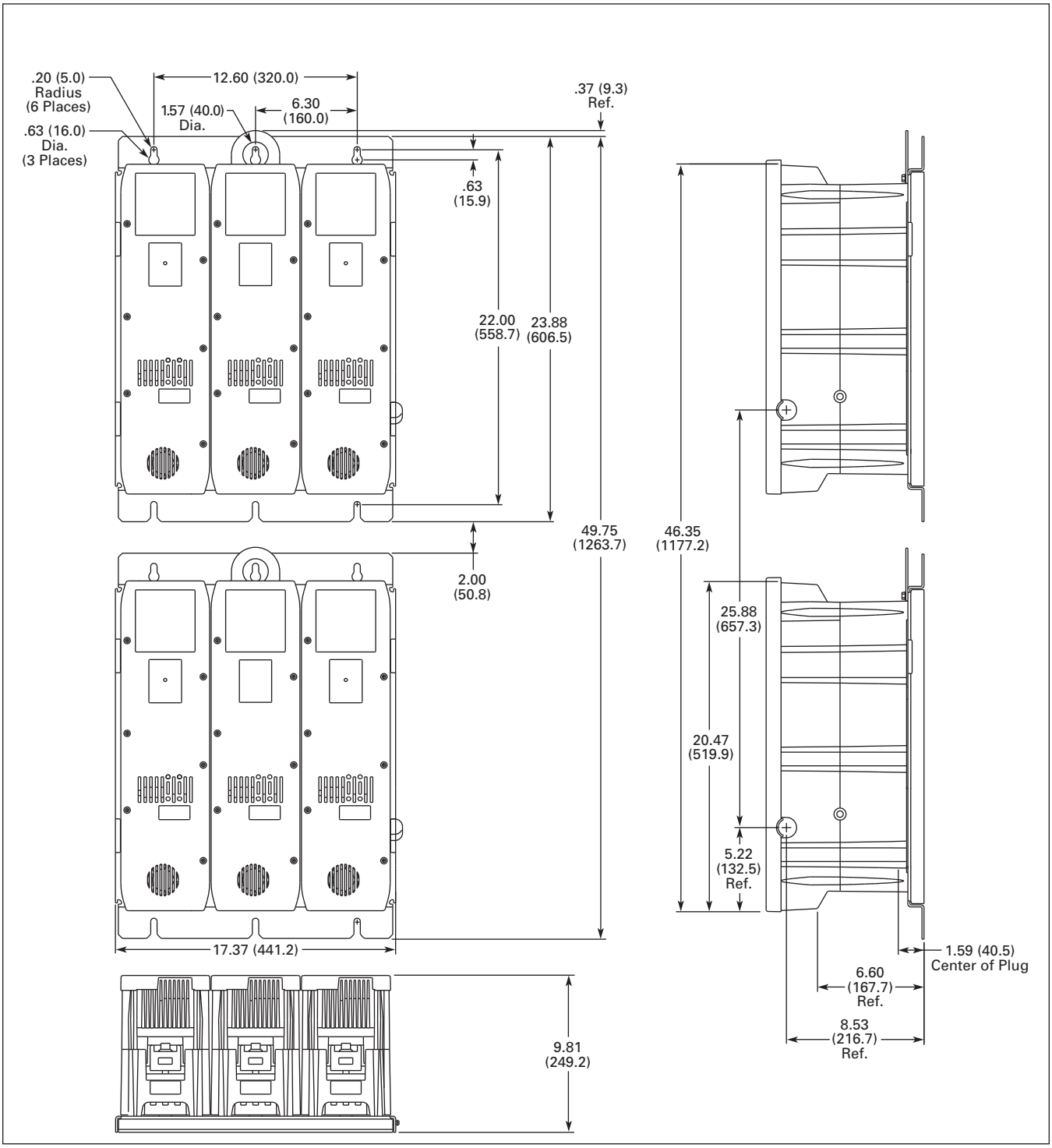

Figure 39-40. Configuration 1 of SMV811B — Approximate Dimensions in Inches (mm)

Configuration 2

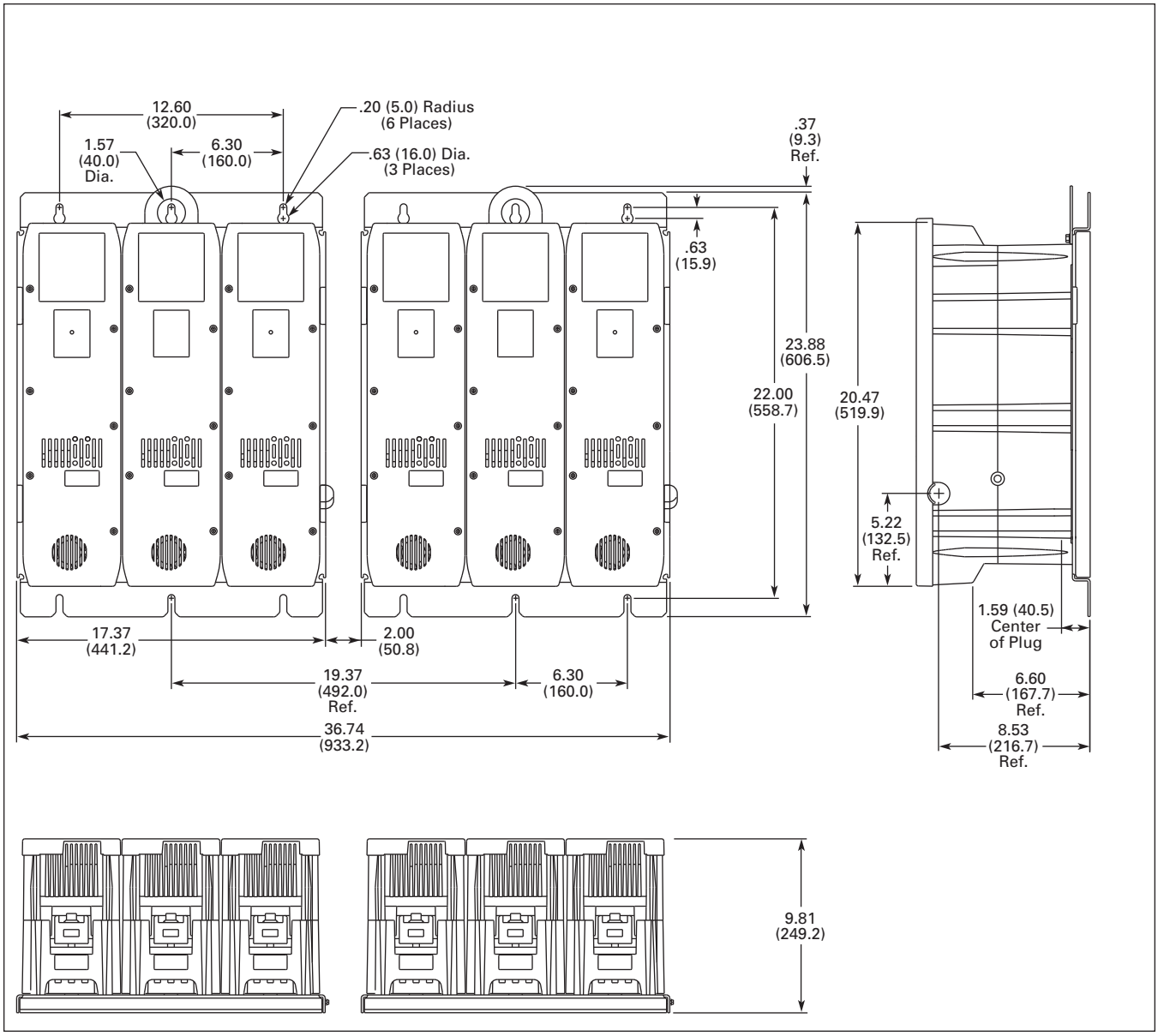

Figure 39-41. Configuration 2 of SMV811B — Approximate Dimensions in Inches (mm)

Configuration 3

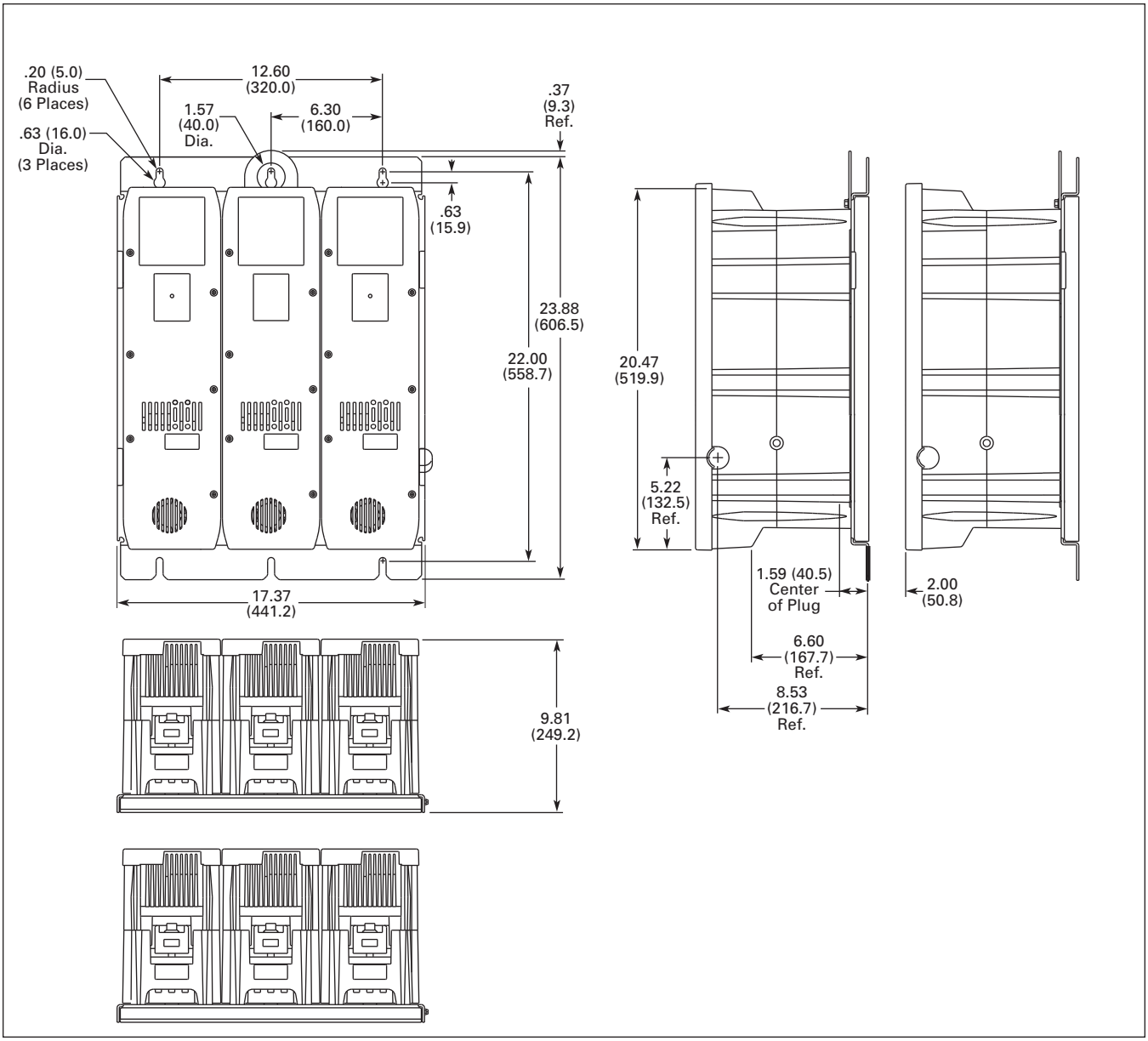

Figure 39-42. Configuration 3 of SMV811B — Approximate Dimensions in Inches (mm)

SMV811C - 7,500V AC

The SMV811C consists of three power module assemblies that are wired in series. The three power module assemblies can be mounted in a variety of configurations as long as the minimum spacing between units is observed. Some examples are shown in **Figures 39-43 – 39-45**.

Configuration 1

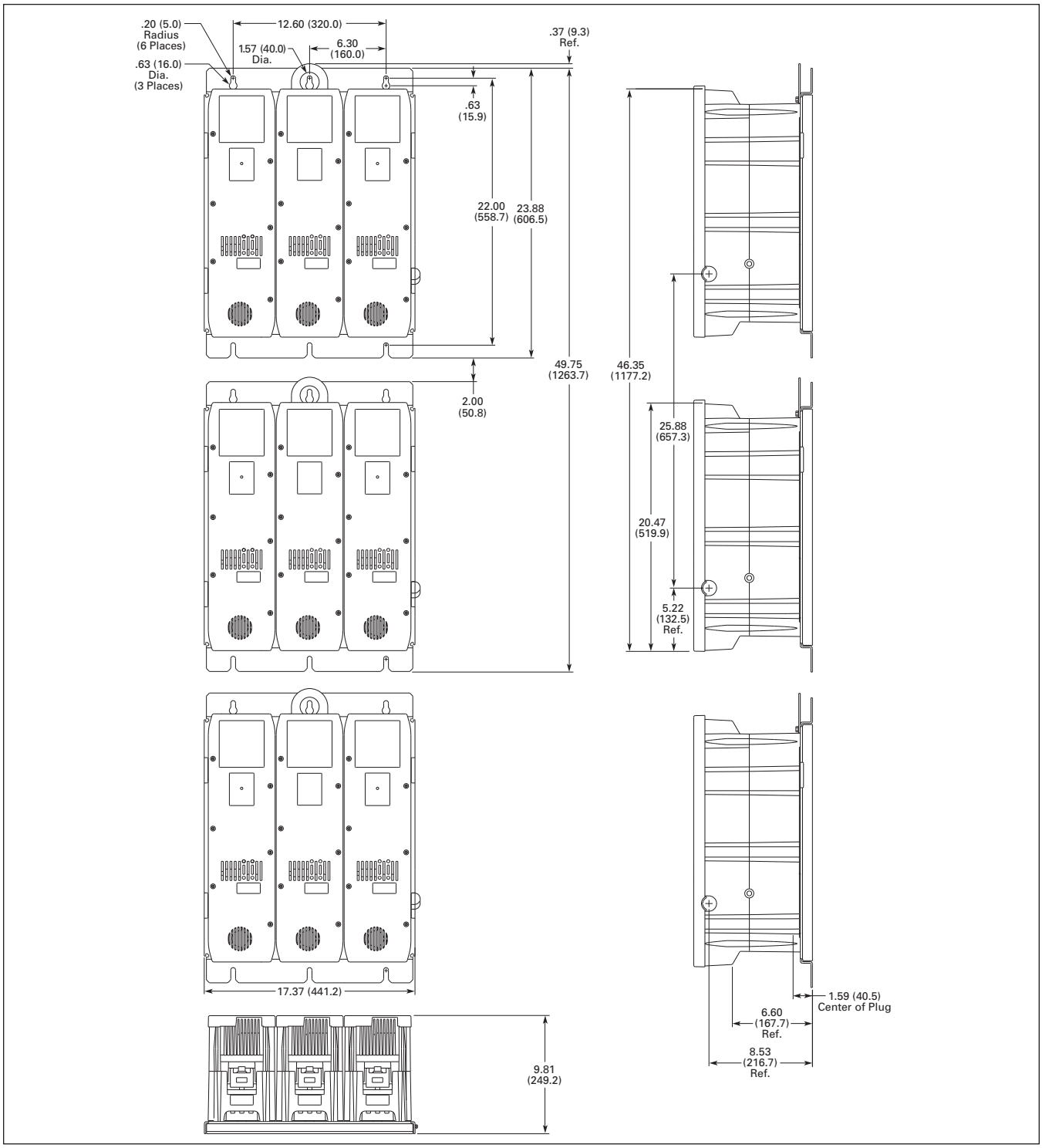

Figure 39-43. Configuration 1 of SMV811C — Approximate Dimensions in Inches (mm)

Configuration 2

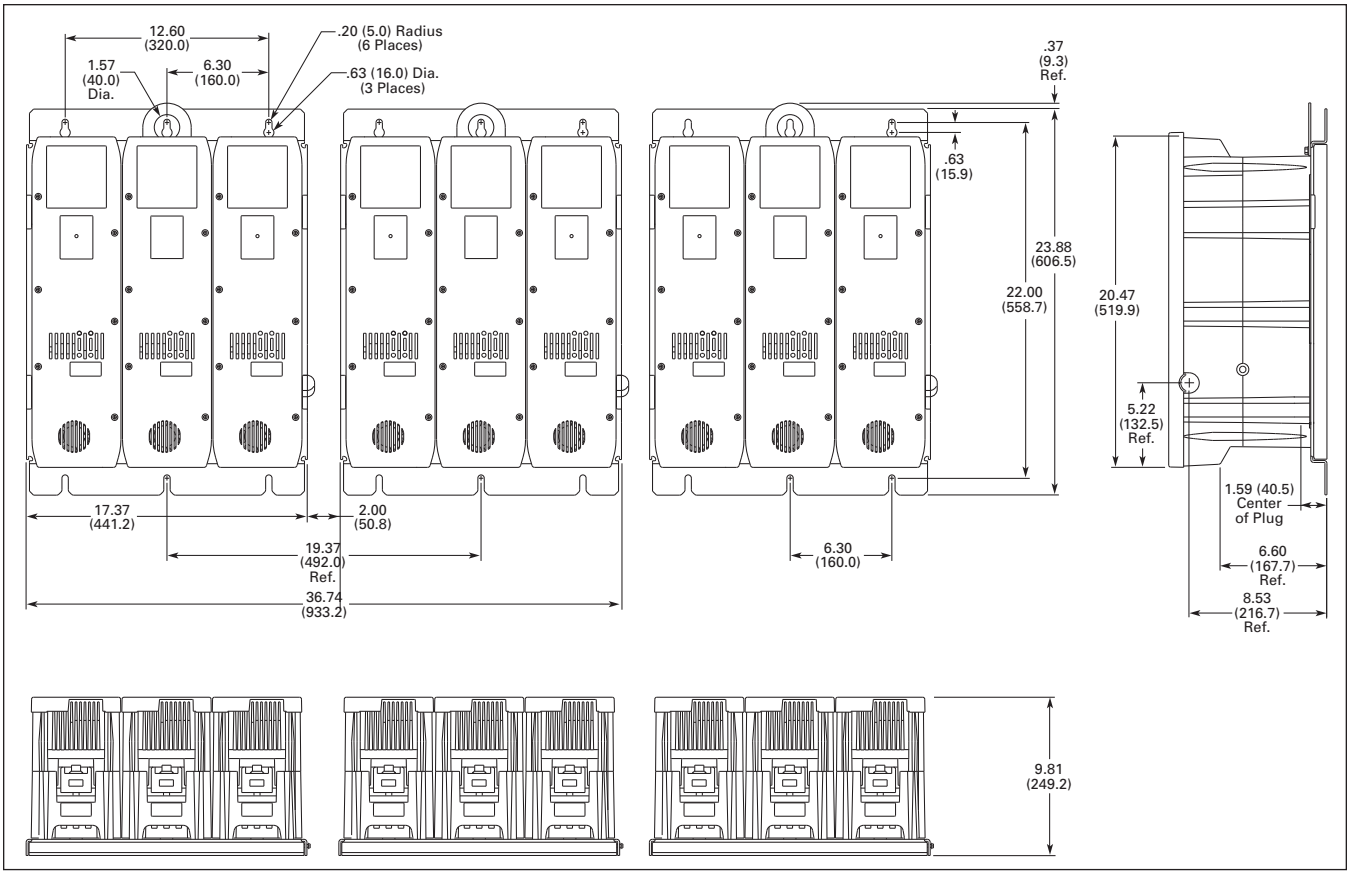

Figure 39-44. Configuration 2 of SMV811C — Approximate Dimensions in Inches (mm)

Configuration 3

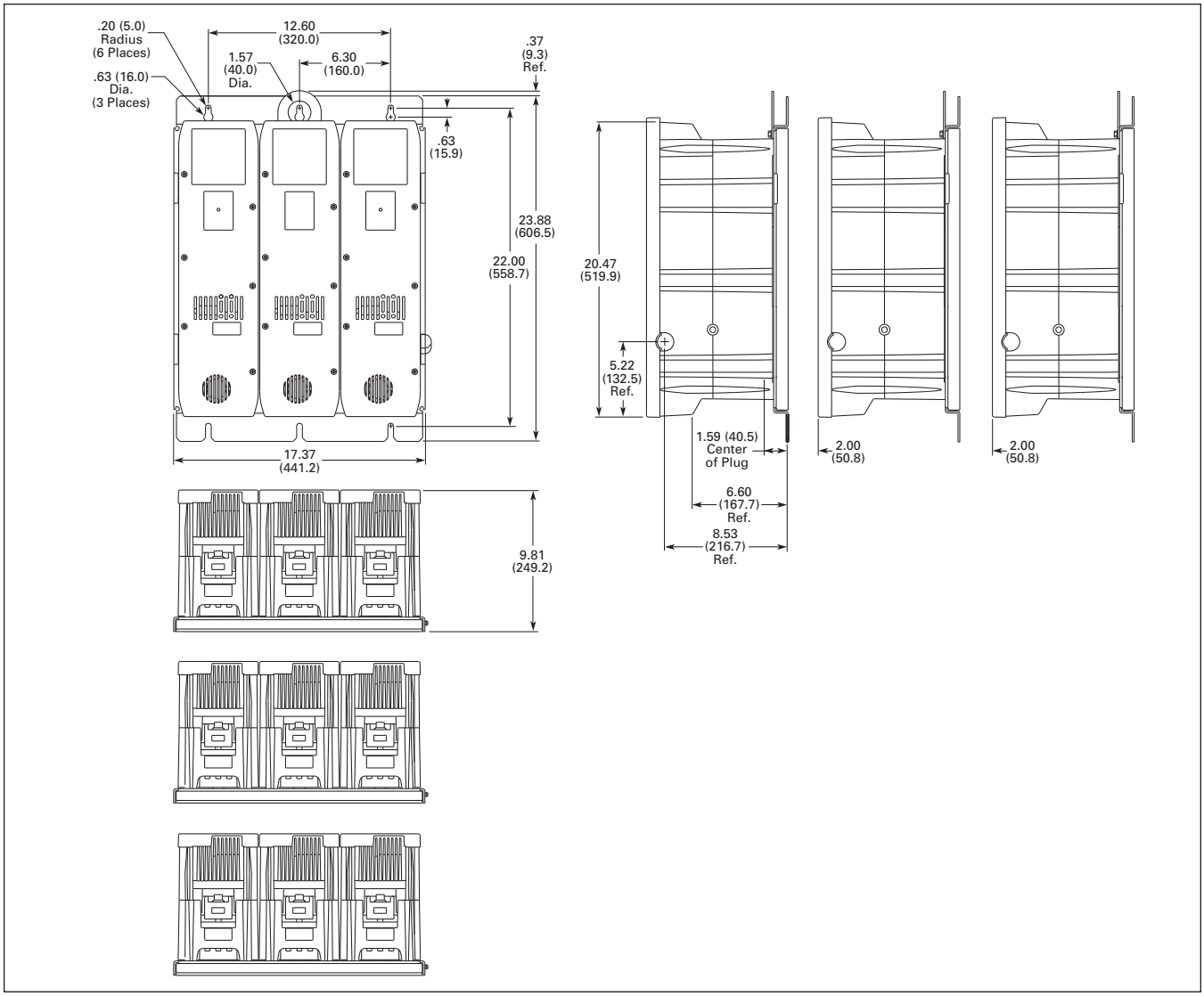

Figure 39-45. Configuration 3 of SMV811C — Approximate Dimensions in Inches (mm)

Control Module

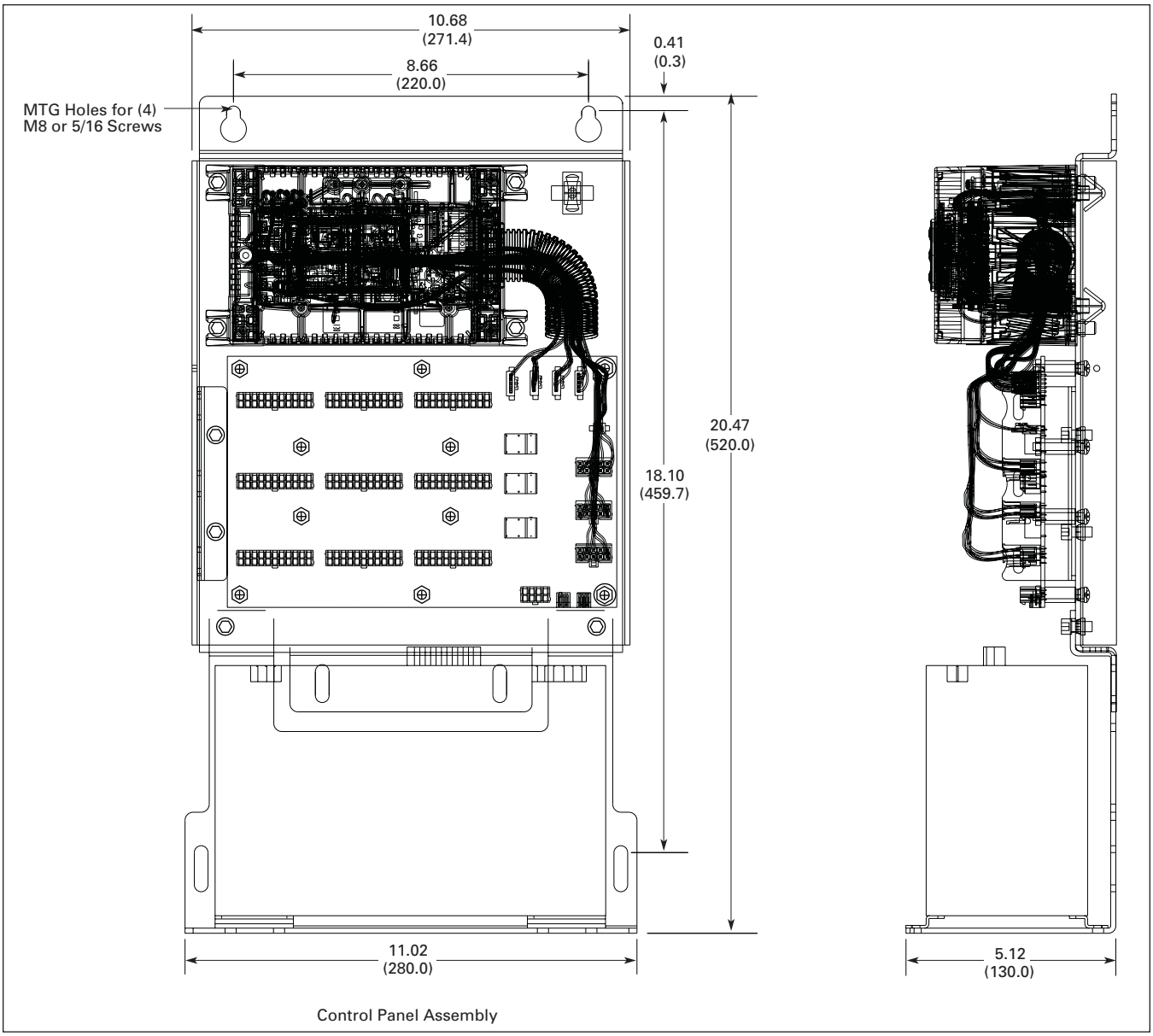

Figure 39-46. Control Module — Approximate Dimensions in Inches (mm)

Contents

Description	*Page*
***IT.* Solid-State Soft Starters — Enclosed**	
Product Family Overview	**39-89**
Cover Control	**39-92**
Catalog Number Selection	**39-91**
Non-combination	
Product Selection	**39-93**
Combination with Fusible Disconnect	
Product Selection	**39-96**
Combination with Breaker	
Product Selection	**39-99**
Dimensions	**39-103**
Wiring Diagrams	**39-104**

Enclosed 40 hp Soft Starter

Product Description

Eaton's revolutionary design for soft starters is shown in the S752, S801 and S811 soft starter products which are members of the Cutler-Hammer® Intelligent Technologies (***IT.***) family of products. These Reduced Voltage Soft Starters are the most compact, multi-functional, easy-to-install products on the market. Their superiority begins with the control package, which features 24V DC control, onboard Digital Signal Processor (DSP), and use of a low impedance run contactor, all of which contribute to the ***IT.*** Soft Starter's safety, advanced functionality and compact size.

Designed to control acceleration and deceleration of three-phase motors, products are available from .25 to 1000 amps and are suitable for mounting in a variety of enclosures including Type 1, 12, 3R, 4, 4X and 7/9.

- Built-in overload protection
  - Adjustable trip class 5, 10, 20, 30
  - 30 – 100% FLA adjustment
  - Selectable phase loss protection
- Selectable current limit or ramp start
- Adjustable ramp times
  - 0 – 180 seconds standard
  - Extended ramps available
- Adjustable torque control
- Adjustable kick start control
- Soft Stop control
  - 0 – 60 seconds standard
  - Extended times available
- Built-in low impedance contactor
- Six SCR Control in all units
- Selectable phase reversal protection
- Digital Interface Module

Features and Benefits

- Mechanical stress on system
  - Reduced wear on belts, gears, chains, clutches, shafts and bearings. You can get up to 2 – 6 times the life on standard belts by switching to a soft starter.
  - Elimination of water-hammer in pumping applications extends component life and helps limit leakage in system.
  - Lower shock to product on conveyor lines and material handling gear.
  - Able to catch motors and fans on the fly and control their acceleration.
- Electrical system improvements
  - Limits the peak inrush current as required by many local codes.
  - Helps to eliminate sags on the plant electrical grid when starting large loads, thus avoiding brown-out conditions.
- 24V DC advantages
  - Offers improved personnel safety by eliminating the need for 120V AC in the enclosure.
  - Soft Starter able to ride through 50% voltage conditions indefinitely due to 24V DC power supply and 0% for up to 100 mS.
- 690V Option available on 180A ratings and larger

Digital Interface Module

The S811 has an easy to use Digital Interface Module (DIM) that allows the user to configure the device and to read system parameters. The DIM includes an LCD display and keypad to scroll through the various menus. The DIM allows the user to modify control parameters, enable or disable protections, set communication variables, monitor system parameters such as line voltages and currents, and access the fault queue.

Digital Interface Module (DIM)

The DIM can be removed from the S811 and remote mounted. Kits are available to door mount the DIM, enabling users to safely configure, commission, monitor and troubleshoot the system at the electrical panel without opening the enclosure door.

Standards and Certifications

Note: See Enclosed Control Product Guide PG0300001E for additional information on Standards and Certifications that apply to all Cutler-Hammer Enclosed Control products.

- UL Listed
- IEC 947-4-2
- EN 60947.2 (for motor controller)
- cUL (indicates appropriate CSA Standard investigation)
- ABS Type Approved

Options

Pump Control Option

- Designed to reduce "water-hammer" during start-up and stopping sequences
- Stop ramp extended to 120 seconds to help control larger motors and systems with long piping runs

LCD Display

- 2 line x 20 character LED back-lit LCD display
- NEMA 4 rated
- Parameters
  - Voltage L-L (AB, BC, AC)
  - Phase Current
  - Average Current
  - Overload Current Setting
  - Pole Temperature
  - Relay Trip Class
  - Thermal Pile
  - Average Line Current as % of FLA
  - DC Control Voltage
  - Start Count
  - Fault History
- English or Spanish version

Table 39-114. Options

Description	Modification Code
Pump Control Option	**P42**
LCD Display	**K5**
Extended Ramp	**R1**

Catalog Number Selection

Table 39-115. Solid-State Enclosed Control Catalog Numbering System

E C S 90 S 1 C A A

Type
S = Solid-State

Class	Table
90 = Non-combination Reduced Voltage Soft-Starter — S752	**39-117**
Non-combination Reduced Voltage Soft-Starter — S801	**39-118**
91 = Combination Reduced Voltage Soft-Starter — Fusible Disconnect — S752	**39-120**
Combination Reduced Voltage Soft-Starter — Fusible Disconnect — S801	**39-121**
92 = Combination Reduced Voltage Soft-Starter — Circuit Breaker — S752	**39-123**
Combination Reduced Voltage Soft-Starter — Circuit Breaker — S801	**39-124**
93 = Non-combination Reduced Voltage Soft-Starter — S811	**39-119**
94 = Combination Reduced Voltage Soft-Starter — Fusible Disconnect — S811	**39-122**
95 = Combination Reduced Voltage Soft-Starter — Circuit Breaker — S811	**39-125**

Amps			
S752	**S801/S811**		
J = .8	**Q** = 37	**Z** = 240	**5** = 650
K = 1.9	**S** = 66	**1** = 304	**6** = 720
L = 4.4	**V** = 105	**2** = 360	**7** = 850
M = 9	**W** = 135	**3** = 420	**8** = 1000
N = 16	**Y** = 180	**4** = 500	
P = 27			
R = 50			

Enclosure Type
1 = Type 1
2 = Type 3R
3 = Type 4
4 = Type 4X (304-Grade SS)
6 = Type 7/9
8 = Type 12
9 = Type 4X (316-Grade SS)

Voltage	
B = 230V	**E** = 200V
C = 460V	**Q** = 24V DC
D = 575V	

Cover Control
See **Table 39-116** for Options

Disconnect Fuse Clip Ratings		
A = None	**G** = 100A/600V R	**N** = 600A/600V R
B = 30A/250V R	**H** = 200A/250V R	**P** = 800A/600V L
C = 30A/600V R	**J** = 200A/600V R	**Q** = 1200A/600V L
D = 60A/250V R	**K** = 400A/250V R	**R** = 1600A/600V L
E = 60A/600V R	**L** = 400A/600V R	**S** = 2000A/600V L
F = 100A/250V R	**M** = 600A/250V R	**T** = by Description
Breaker		
A = None	**F** = 50A	**K** = 400A
B = 3A	**W** = 70A	**L** = 600A
C = 7A	**G** = 100A	**P** = 1200A
D = 15A	**H** = 150A	**Q** = 1600A
E = 30A	**J** = 250A	

Cover Control

Flange Control Kits

For on-the-job conversion of Type 1, 3R, 4, 4X and 12 enclosed starters. Knock-outs are provided on the Type 1 flange. Type 3R, 4, 4X and 12 have prepunched holes with removable hole plugs.

Factory Installed Pilot Devices

To order factory installed pilot devices, change the 9th character of the Catalog Number to the alpha shown in the table below. Example: to order an **ECS90J4CAA** with START/STOP pushbuttons and a red pilot light, change the **A** to a **C**, i.e. ECS90J4C**C**A.

Table 39-116. Non-reversing Pilot Devices

Description	Factory Installed Flange Control	Field Installation Kits		Description	Factory Installed Flange Control	Field Installation Kits	
	Position 9 Alpha	Catalog Number	Price U.S. $		Position 9 Alpha	Catalog Number	Price U.S. $
No Cover Mounted Pilot Devices	**A**	—		START Pushbutton	**L**	**C400T3**	
START/STOP Pushbuttons	**B**	**C400T1**		ON Pushbutton	**M**	**C400T4**	
with Red RUN Pilot Light	**C**	—		OFF Pushbutton	**N**	**C400T5**	
with Red RUN/Green OFF Lights	**D**	—		Red RUN Pilot Light	**P**	**C400T9** ①	
				Green OFF	**Q**	**C400T10** ①	
				Red RUN/Green OFF Pilot Lights	**R**	**C400T11** ①	
ON/OFF Pushbuttons	**E**	**C400T2**		START/STOP Selector Switch	**S**	**C400T13**	
with Red RUN Pilot Light	**F**	—		with Red RUN Pilot Light	**T**	—	
with Red RUN/Green OFF Lights	**G**	—		with Red RUN/Green OFF Lights	**U**	—	
HAND/OFF/AUTO Selector Switch	**H**	**C400T12**		ON/OFF Selector Switch	**V**	**C400T14**	
with Red RUN Pilot Light	**J**	—		with Red RUN Pilot Light	**W**	—	
with Red RUN/Green OFF Lights	**K**	—		with Red RUN/Green OFF Lights	**X**	—	

① Add Code Letter from the table below to Catalog Number for voltage — Kits only. Example: C400T9**B**.

Rating	Code Letter	Rating	Code Letter	Rating	Code Letter
120V 60 Hz	**A**	240V 60 Hz	**B**	480V 60 Hz	**C**
208V 60 Hz	**E**	380V 50 Hz	**L**	600V 60 Hz	**D**

Discount Symbol **1CD1**

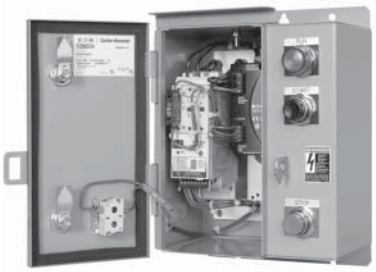

Product Selection

Table 39-117. Class ECS90 — Non-combination Reduced Voltage Soft-Starter — S752

Amps	Motor Voltage	hp ①②	Coil Voltage ③	Type 1		Type 3R		Type 4X ④		Type 7/9		Type 12		Component Soft Starter (Open)
				Catalog Number	Price U.S. $	Catalog Number	Price U.S. $	Catalog Number	Price U.S. $	Catalog Number	Price U.S. $	Catalog Number	Price U.S. $	Catalog Number
Frame Size — 54 mm														
.8A	200V	1/8	24V DC	ECS90J1EAA		ECS90J2EAA		ECS90J4EAA		ECS90J6EAA		ECS90J8EAA		S752L01N3S
	230V	1/6		ECS90J1BAA		ECS90J2BAA		ECS90J4BAA		ECS90J6BAA		ECS90J8BAA		
	460V	1/3		ECS90J1CAA		ECS90J2CAA		ECS90J4CAA		ECS90J6CAA		ECS90J8CAA		
	575V	1/3		ECS90J1DAA		ECS90J2DAA		ECS90J4DAA		ECS90J6DAA		ECS90J8DAA		
1.9A	200V	1/3	24V DC	ECS90K1EAA		ECS90K2EAA		ECS90K4EAA		ECS90K6EAA		ECS90K8EAA		S752L02N3S
	230V	1/3		ECS90K1BAA		ECS90K2BAA		ECS90K4BAA		ECS90K6BAA		ECS90K8BAA		
	460V	3/4		ECS90K1CAA		ECS90K2CAA		ECS90K4CAA		ECS90K6CAA		ECS90K8CAA		
	575V	1		ECS90K1DAA		ECS90K2DAA		ECS90K4DAA		ECS90K6DAA		ECS90K8DAA		
4.4A	200V	3/4	24V DC	ECS90L1EAA		ECS90L2EAA		ECS90L4EAA		ECS90L6EAA		ECS90L8EAA		S752L04N3S
	230V	1		ECS90L1BAA		ECS90L2BAA		ECS90L4BAA		ECS90L6BAA		ECS90L8BAA		
	460V	2		ECS90L1CAA		ECS90L2CAA		ECS90L4CAA		ECS90L6CAA		ECS90L8CAA		
	575V	3		ECS90L1DAA		ECS90L2DAA		ECS90L4DAA		ECS90L6DAA		ECS90L8DAA		
9A	200V	2	24V DC	ECS90M1EAA		ECS90M2EAA		ECS90M4EAA		ECS90M6EAA		ECS90M8EAA		S752L09N3S
	230V	2		ECS90M1BAA		ECS90M2BAA		ECS90M4BAA		ECS90M6BAA		ECS90M8BAA		
	460V	5		ECS90M1CAA		ECS90M2CAA		ECS90M4CAA		ECS90M6CAA		ECS90M8CAA		
	575V	7-1/2		ECS90M1DAA		ECS90M2DAA		ECS90M4DAA		ECS90M6DAA		ECS90M8DAA		
16A	200V	3	24V DC	ECS90N1EAA		ECS90N2EAA		ECS90N4EAA		ECS90N6EAA		ECS90N8EAA		S752L16N3S
	230V	5		ECS90N1BAA		ECS90N2BAA		ECS90N4BAA		ECS90N6BAA		ECS90N8BAA		
	460V	10		ECS90N1CAA		ECS90N2CAA		ECS90N4CAA		ECS90N6CAA		ECS90N8CAA		
	575V	10		ECS90N1DAA		ECS90N2DAA		ECS90N4DAA		ECS90N6DAA		ECS90N8DAA		
27A	200V	7-1/2	24V DC	ECS90P1EAA		ECS90P2EAA		ECS90P4EAA		ECS90P6EAA		ECS90P8EAA		S752L27N3S
	230V	7-1/2		ECS90P1BAA		ECS90P2BAA		ECS90P4BAA		ECS90P6BAA		ECS90P8BAA		
	460V	20		ECS90P1CAA		ECS90P2CAA		ECS90P4CAA		ECS90P6CAA		ECS90P8CAA		
	575V	25		ECS90P1DAA		ECS90P2DAA		ECS90P4DAA		ECS90P6DAA		ECS90P8DAA		
50A	200V	10	24V DC	ECS90R1EAA		ECS90R2EAA		ECS90R4EAA		ECS90R6EAA		ECS90R8EAA		S752L50N3S
	230V	10		ECS90R1BAA		ECS90R2BAA		ECS90R4BAA		ECS90R6BAA		ECS90R8BAA		
	460V	30		ECS90R1CAA		ECS90R2CAA		ECS90R4CAA		ECS90R6CAA		ECS90R8CAA		
	575V	40		ECS90R1DAA		ECS90R2DAA		ECS90R4DAA		ECS90R6DAA		ECS90R8DAA		

① hp Ratings are based on 40°C Ambient and:
- 25 sec. ramp — 2 starts/hr
- 15 sec. ramp — 4 starts/hr
- 10 sec. ramp — 6 starts/hr
- 7.5 sec. ramp — 8 starts/hr
- 3 sec. ramp — 15 starts/hr

For other ratings, consult your Eaton Representative.

② Based on 1.0 Service Factor. For 1.15 consult Eaton.

③ All *IT.* soft starters are furnished with 24V DC coils and control power supplies. For 24V DC separate control, use Mod Code **C35** and change the 8th digit to **Q** (i.e. ECS90S1**E**AA becomes ECS90S1**Q**AA-**C35**).

④ These are the Catalog Numbers for Type 4X 304-Grade Stainless Steel, as indicated by the seventh digit **4**. Example: ECS90J**4**EAA. To order Type 4X 316-Grade Stainless Steel, change that digit to **9**. To order Type 4 Painted Steel, change that digit to **3**. To order Nonmetallic, change that digit to **5**. For details on these Alternate Enclosures, see **PG03300001E**.

Cover Control ..... **Page 39-92**
Dimensions ..... **Page 39-103**
Wiring Diagrams ..... **Page 39-104**
Accessories **PG03300001E**
Modifications **PG03300001E**
Technical Data **PG03300001E**
Discount Symbol **1CD1**

Table 39-118. Class ECS90 — Non-combination Reduced Voltage Soft-Starter — S801

Amps	Motor Voltage	hp ①②	Coil Voltage ③	Type 1		Type 3R		Type 4X ④		Type 7/9		Type 12		Component Soft Starter (Open)
				Catalog Number	Price U.S. $	Catalog Number	Price U.S. $	Catalog Number	Price U.S. $	Catalog Number	Price U.S. $	Catalog Number	Price U.S. $	Catalog Number
Frame Size — 65 mm														
37A	200V	10	24V DC	ECS90Q1EAA		ECS90Q2EAA		ECS90Q4EAA		ECS90Q6EAA		ECS90Q8EAA		S801N37N3S
	230V	10		ECS90Q1BAA		ECS90Q2BAA		ECS90Q4BAA		ECS90Q6BAA		ECS90Q8BAA		
	460V	25		ECS90Q1CAA		ECS90Q2CAA		ECS90Q4CAA		ECS90Q6CAA		ECS90Q8CAA		
	575V	30		ECS90Q1DAA		ECS90Q2DAA		ECS90Q4DAA		ECS90Q6DAA		ECS90Q8DAA		
66A	200V	20	24V DC	ECS90S1EAA		ECS90S2EAA		ECS90S4EAA		ECS90S6EAA		ECS90S8EAA		S801N66N3S
	230V	20		ECS90S1BAA		ECS90S2BAA		ECS90S4BAA		ECS90S6BAA		ECS90S8BAA		
	460V	50		ECS90S1CAA		ECS90S2CAA		ECS90S4CAA		ECS90S6CAA		ECS90S8CAA		
	575V	60		ECS90S1DAA		ECS90S2DAA		ECS90S4DAA		ECS90S6DAA		ECS90S8DAA		
Frame Size — 110 mm														
105A	200V	30	24V DC	ECS90V1EAA		ECS90V2EAA		ECS90V4EAA		ECS90V6EAA		ECS90V8EAA		S801R10N3S
	230V	40		ECS90V1BAA		ECS90V2BAA		ECS90V4BAA		ECS90V6BAA		ECS90V8BAA		
	460V	75		ECS90V1CAA		ECS90V2CAA		ECS90V4CAA		ECS90V6CAA		ECS90V8CAA		
	575V	100		ECS90V1DAA		ECS90V2DAA		ECS90V4DAA		ECS90V6DAA		ECS90V8DAA		
135A	200V	40	24V DC	ECS90W1EAA		ECS90W2EAA		ECS90W4EAA		ECS90W6EAA		ECS90W8EAA		S801R13N3S
	230V	50		ECS90W1BAA		ECS90W2BAA		ECS90W4BAA		ECS90W6BAA		ECS90W8BAA		
	460V	100		ECS90W1CAA		ECS90W2CAA		ECS90W4CAA		ECS90W6CAA		ECS90W8CAA		
	575V	125		ECS90W1DAA		ECS90W2DAA		ECS90W4DAA		ECS90W6DAA		ECS90W8DAA		
Frame Size — 200 mm														
180A	200V	60	24V DC	ECS90Y1EAA		ECS90Y2EAA		ECS90Y4EAA		ECS90Y6EAA		ECS90Y8EAA		S801T18N3S
	230V	60		ECS90Y1BAA		ECS90Y2BAA		ECS90Y4BAA		ECS90Y6BAA		ECS90Y8BAA		
	460V	150		ECS90Y1CAA		ECS90Y2CAA		ECS90Y4CAA		ECS90Y6CAA		ECS90Y8CAA		
	575V	150		ECS90Y1DAA		ECS90Y2DAA		ECS90Y4DAA		ECS90Y6DAA		ECS90Y8DAA		
240A	200V	75	24V DC	ECS90Z1EAA		ECS90Z2EAA		ECS90Z4EAA		ECS90Z6EAA		ECS90Z8EAA		S801T24N3S
	230V	75		ECS90Z1BAA		ECS90Z2BAA		ECS90Z4BAA		ECS90Z6BAA		ECS90Z8BAA		
	460V	200		ECS90Z1CAA		ECS90Z2CAA		ECS90Z4CAA		ECS90Z6CAA		ECS90Z8CAA		
	575V	200		ECS90Z1DAA		ECS90Z2DAA		ECS90Z4DAA		ECS90Z6DAA		ECS90Z8DAA		
304A	200V	100	24V DC	ECS9011EAA		ECS9012EAA		ECS9014EAA		ECS9016EAA		ECS9018EAA		S801T30N3S
	230V	100		ECS9011BAA		ECS9012BAA		ECS9014BAA		ECS9016BAA		ECS9018BAA		
	460V	250		ECS9011CAA		ECS9012CAA		ECS9014CAA		ECS9016CAA		ECS9018CAA		
	575V	300		ECS9011DAA		ECS9012DAA		ECS9014DAA		ECS9016DAA		ECS9018DAA		
Frame Size — 290 mm														
360A	200V	125	24V DC	ECS9021EAA		ECS9022EAA		ECS9024EAA		ECS9026EAA		ECS9028EAA		S801V36N3S
	230V	150		ECS9021BAA		ECS9022BAA		ECS9024BAA		ECS9026BAA		ECS9028BAA		
	460V	300		ECS9021CAA		ECS9022CAA		ECS9024CAA		ECS9026CAA		ECS9028CAA		
	575V	350		ECS9021DAA		ECS9022DAA		ECS9024DAA		ECS9026DAA		ECS9028DAA		
420A	200V	150	24V DC	ECS9031EAA		ECS9032EAA		ECS9034EAA		ECS9036EAA		ECS9038EAA		S801V42N3S
	230V	175		ECS9031BAA		ECS9032BAA		ECS9034BAA		ECS9036BAA		ECS9038BAA		
	460V	350		ECS9031CAA		ECS9032CAA		ECS9034CAA		ECS9036CAA		ECS9038CAA		
	575V	450		ECS9031DAA		ECS9032DAA		ECS9034DAA		ECS9036DAA		ECS9038DAA		
500A	200V	150	24V DC	ECS9041EAA		ECS9042EAA		ECS9044EAA		ECS9046EAA		ECS9048EAA		S801V50N3S
	230V	200		ECS9041BAA		ECS9042BAA		ECS9044BAA		ECS9046BAA		ECS9048BAA		
	460V	400		ECS9041CAA		ECS9042CAA		ECS9044CAA		ECS9046CAA		ECS9048CAA		
	575V	500		ECS9041DAA		ECS9042DAA		ECS9044DAA		ECS9046DAA		ECS9048DAA		
650A	200V	250	24V DC	ECS9051EAA		ECS9052EAA		ECS9054EAA		ECS9056EAA		ECS9058EAA		S801V65N3S
	230V	250		ECS9051BAA		ECS9052BAA		ECS9054BAA		ECS9056BAA		ECS9058BAA		
	460V	500		ECS9051CAA		ECS9052CAA		ECS9054CAA		ECS9056CAA		ECS9058CAA		
	575V	600		ECS9051DAA		ECS9052DAA		ECS9054DAA		ECS9056DAA		ECS9058DAA		
720A	230V	300	24V DC	ECS9061BAA		ECS9062BAA		ECS9064BAA		ECS9066BAA		ECS9068BAA		S801V72N3S
	460V	600		ECS9061CAA		ECS9062CAA		ECS9064CAA		ECS9066CAA		ECS9068CAA		
	575V	700		ECS9061DAA		ECS9062DAA		ECS9064DAA		ECS9066DAA		ECS9068DAA		
850A	230V	350	24V DC	ECS9071BAA		ECS9072BAA		ECS9074BAA		ECS9076BAA		ECS9078BAA		S801V85N3S
	460V	700		ECS9071CAA		ECS9072CAA		ECS9074CAA		ECS9076CAA		ECS9078CAA		
	575V	900		ECS9071DAA		ECS9072DAA		ECS9074DAA		ECS9076DAA		ECS9078DAA		
1000A	230V	400	24V DC	ECS9081BAA		ECS9082BAA		ECS9084BAA		ECS9086BAA		ECS9088BAA		S801V10N3S
	460V	800		ECS9081CAA		ECS9082CAA		ECS9084CAA		ECS9086CAA		ECS9088CAA		
	575V	1000		ECS9081DAA		ECS9082DAA		ECS9084DAA		ECS9086DAA		ECS9088DAA		

① Standard duty horsepower ratings are for 300% ramp current, 30 seconds ramp time, and 3 starts per hour. Consult Eaton for other ratings.

② Based on 1.0 Service Factor. For 1.15 consult Eaton.

③ All *IT.* soft starters are furnished with 24V DC coils and control power supplies. For 24V DC separate control, use Mod Code **C35** and change the 8th digit to **O** (i.e. ECS90S1**E**AA becomes ECS90S1**O**AA-**C35**).

④ These are the Catalog Numbers for Type 4X 304-Grade Stainless Steel, as indicated by the seventh digit **4**. Example: ECS90S**4**EAA. To order Type 4X 316-Grade Stainless Steel, change that digit to **9**. To order Type 4 Painted Steel, change that digit to **3**. To order Nonmetallic, change that digit to **5**. For details on these Alternate Enclosures, see **PG03300001E**.

Cover Control ..... **Page 39-92**
Dimensions ..... **Page 39-103**
Wiring Diagrams ..... **Page 39-104**
Accessories **PG03300001E**
Modifications **PG03300001E**
Technical Data **PG03300001E**
Discount Symbol **1CD1**

Table 39-119. Class ECS93 — Non-combination Reduced Voltage Soft-Starter — S811 ①

Amps	Motor Voltage	hp ②③	Coil Voltage ④	Type 1		Type 3R		Type 4X ⑤		Type 7/9		Type 12		Component Soft Starter (Open)
				Catalog Number	Price U.S. $	Catalog Number	Price U.S. $	Catalog Number	Price U.S. $	Catalog Number	Price U.S. $	Catalog Number	Price U.S. $	Catalog Number
Frame Size — 65 mm														
37A	200V	10	24V DC	ECS93Q1EAA		ECS93Q2EAA		ECS93Q4EAA		ECS93Q6EAA		ECS93Q8EAA		S811N37N3S
	230V	10		ECS93Q1BAA		ECS93Q2BAA		ECS93Q4BAA		ECS93Q6BAA		ECS93Q8BAA		
	460V	25		ECS93Q1CAA		ECS93Q2CAA		ECS93Q4CAA		ECS93Q6CAA		ECS93Q8CAA		
	575V	30		ECS93Q1DAA		ECS93Q2DAA		ECS93Q4DAA		ECS93Q6DAA		ECS93Q8DAA		
66A	200V	20	24V DC	ECS93S1EAA		ECS93S2EAA		ECS93S4EAA		ECS93S6EAA		ECS93S8EAA		S811N66N3S
	230V	20		ECS93S1BAA		ECS93S2BAA		ECS93S4BAA		ECS93S6BAA		ECS93S8BAA		
	460V	50		ECS93S1CAA		ECS93S2CAA		ECS93S4CAA		ECS93S6CAA		ECS93S8CAA		
	575V	60		ECS93S1DAA		ECS93S2DAA		ECS93S4DAA		ECS93S6DAA		ECS93S8DAA		
Frame Size — 110 mm														
105A	200V	30	24V DC	ECS93V1EAA		ECS93V2EAA		ECS93V4EAA		ECS93V6EAA		ECS93V8EAA		S811R10N3S
	230V	40		ECS93V1BAA		ECS93V2BAA		ECS93V4BAA		ECS93V6BAA		ECS93V8BAA		
	460V	75		ECS93V1CAA		ECS93V2CAA		ECS93V4CAA		ECS93V6CAA		ECS93V8CAA		
	575V	100		ECS93V1DAA		ECS93V2DAA		ECS93V4DAA		ECS93V6DAA		ECS93V8DAA		
135A	200V	40	24V DC	ECS93W1EAA		ECS93W2EAA		ECS93W4EAA		ECS93W6EAA		ECS93W8EAA		S811R13N3S
	230V	50		ECS93W1BAA		ECS93W2BAA		ECS93W4BAA		ECS93W6BAA		ECS93W8BAA		
	460V	100		ECS93W1CAA		ECS93W2CAA		ECS93W4CAA		ECS93W6CAA		ECS93W8CAA		
	575V	125		ECS93W1DAA		ECS93W2DAA		ECS93W4DAA		ECS93W6DAA		ECS93W8DAA		
Frame Size — 200 mm														
180A	200V	60	24V DC	ECS93Y1EAA		ECS93Y2EAA		ECS93Y4EAA		ECS93Y6EAA		ECS93Y8EAA		S811T18N3S
	230V	60		ECS93Y1BAA		ECS93Y2BAA		ECS93Y4BAA		ECS93Y6BAA		ECS93Y8BAA		
	460V	150		ECS93Y1CAA		ECS93Y2CAA		ECS93Y4CAA		ECS93Y6CAA		ECS93Y8CAA		
	575V	150		ECS93Y1DAA		ECS93Y2DAA		ECS93Y4DAA		ECS93Y6DAA		ECS93Y8DAA		
240A	200V	75	24V DC	ECS93Z1EAA		ECS93Z2EAA		ECS93Z4EAA		ECS93Z6EAA		ECS93Z8EAA		S811T24N3S
	230V	75		ECS93Z1BAA		ECS93Z2BAA		ECS93Z4BAA		ECS93Z6BAA		ECS93Z8BAA		
	460V	200		ECS93Z1CAA		ECS93Z2CAA		ECS93Z4CAA		ECS93Z6CAA		ECS93Z8CAA		
	575V	200		ECS93Z1DAA		ECS93Z2DAA		ECS93Z4DAA		ECS93Z6DAA		ECS93Z8DAA		
304A	200V	100	24V DC	ECS9311EAA		ECS9312EAA		ECS9314EAA		ECS9316EAA		ECS9318EAA		S811T30N3S
	230V	100		ECS9311BAA		ECS9312BAA		ECS9314BAA		ECS9316BAA		ECS9318BAA		
	460V	250		ECS9311CAA		ECS9312CAA		ECS9314CAA		ECS9316CAA		ECS9318CAA		
	575V	300		ECS9311DAA		ECS9312DAA		ECS9314DAA		ECS9316DAA		ECS9318DAA		
Frame Size — 290 mm														
360A	200V	125	24V DC	ECS9321EAA		ECS9322EAA		ECS9324EAA		ECS9326EAA		ECS9328EAA		S811V36N3S
	230V	150		ECS9321BAA		ECS9322BAA		ECS9324BAA		ECS9326BAA		ECS9328BAA		
	460V	300		ECS9321CAA		ECS9322CAA		ECS9324CAA		ECS9326CAA		ECS9328CAA		
	575V	350		ECS9321DAA		ECS9322DAA		ECS9324DAA		ECS9326DAA		ECS9328DAA		
420A	200V	150	24V DC	ECS9331EAA		ECS9332EAA		ECS9334EAA		ECS9336EAA		ECS9338EAA		S811V42N3S
	230V	175		ECS9331BAA		ECS9332BAA		ECS9334BAA		ECS9336BAA		ECS9338BAA		
	460V	350		ECS9331CAA		ECS9332CAA		ECS9334CAA		ECS9336CAA		ECS9338CAA		
	575V	450		ECS9331DAA		ECS9332DAA		ECS9334DAA		ECS9336DAA		ECS9338DAA		
500A	200V	150	24V DC	ECS9341EAA		ECS9342EAA		ECS9344EAA		ECS9346EAA		ECS9348EAA		S811V50N3S
	230V	200		ECS9341BAA		ECS9342BAA		ECS9344BAA		ECS9346BAA		ECS9348BAA		
	460V	400		ECS9341CAA		ECS9342CAA		ECS9344CAA		ECS9346CAA		ECS9348CAA		
	575V	500		ECS9341DAA		ECS9342DAA		ECS9344DAA		ECS9346DAA		ECS9348DAA		
650A	200V	250	24V DC	ECS9351EAA		ECS9352EAA		ECS9354EAA		ECS9356EAA		ECS9358EAA		S811V65N3S
	230V	250		ECS9351BAA		ECS9352BAA		ECS9354BAA		ECS9356BAA		ECS9358BAA		
	460V	500		ECS9351CAA		ECS9352CAA		ECS9354CAA		ECS9356CAA		ECS9358CAA		
	575V	600		ECS9351DAA		ECS9352DAA		ECS9354DAA		ECS9356DAA		ECS9358DAA		
720A	230V	300	24V DC	ECS9361BAA		ECS9362BAA		ECS9364BAA		ECS9366BAA		ECS9368BAA		S811V72N3S
	460V	600		ECS9361CAA		ECS9362CAA		ECS9364CAA		ECS9366CAA		ECS9368CAA		
	575V	700		ECS9361DAA		ECS9362DAA		ECS9364DAA		ECS9366DAA		ECS9368DAA		
850A	230V	350	24V DC	ECS9371BAA		ECS9372BAA		ECS9374BAA		ECS9376BAA		ECS9378BAA		S811V85N3S
	460V	700		ECS9371CAA		ECS9372CAA		ECS9374CAA		ECS9376CAA		ECS9378CAA		
	575V	900		ECS9371DAA		ECS9372DAA		ECS9374DAA		ECS9376DAA		ECS9378DAA		
1000A	230V	400	24V DC	ECS9381BAA		ECS9382BAA		ECS9384BAA		ECS9386BAA		ECS9388BAA		S811V10N3S
	460V	800		ECS9381CAA		ECS9382CAA		ECS9384CAA		ECS9386CAA		ECS9388CAA		
	575V	1000		ECS9381DAA		ECS9382DAA		ECS9384DAA		ECS9386DAA		ECS9388DAA		

① Digital Interface Module (DIM) is mounted on door as standard.

② Standard duty horsepower ratings are for 300% ramp current, 30 seconds ramp time, and 3 starts per hour. Consult Eaton for other ratings.

③ Based on 1.0 Service Factor. For 1.15 consult Eaton.

④ All *IT.* soft starters are furnished with 24V DC coils and control power supplies. For 24V DC separate control, use Mod Code **C35** and change the 8th digit to **Q** (i.e. ECS90S1**E**AA becomes ECS90S1**Q**AA-**C35**).

⑤ These are the Catalog Numbers for Type 4X 304-Grade Stainless Steel, as indicated by the seventh digit **4**. Example: ECS93S**4**EAA. To order Type 4X 316-Grade Stainless Steel, change that digit to **9**. To order Type 4 Painted Steel, change that digit to **3**. To order Nonmetallic, change that digit to **5**. For details on these Alternate Enclosures, see **PG03300001E**.

Cover Control ..... **Page 39-92**
Dimensions ..... **Page 39-103**
Wiring Diagrams ..... **Page 39-104**
Accessories **PG03300001E**
Modifications **PG03300001E**
Technical Data **PG03300001E**
Discount Symbol **1CD1**

Type 3R Fused S801 IT. Soft Starter

Product Selection

Table 39-120. Class ECS91 — Combination Reduced Voltage Soft-Starter — Fusible Disconnect — S752

Amps	Motor Voltage	hp ①	Coil Voltage ②	Switch Rating	Type 1		Type 3R		Type 4X ③		Type 7/9		Type 12		Component Soft Starter (Open)
					Catalog Number	Price U.S. $	Catalog Number	Price U.S. $	Catalog Number	Price U.S. $	Catalog Number	Price U.S. $	Catalog Number	Price U.S. $	Catalog Number
Frame Size — 54 mm															
.8A	200V	1/8	24V DC	30A	ECS91J1EAB		ECS91J2EAB		ECS91J4EAB		ECS91J6EAB		ECS91J8EAB		S752L01N3S
	230V	1/6			ECS91J1BAB		ECS91J2BAB		ECS91J4BAB		ECS91J6BAB		ECS91J8BAB		
	460V	1/3			ECS91J1CAC		ECS91J2CAC		ECS91J4CAC		ECS91J6CAC		ECS91J8CAC		
	575V	1/3			ECS91J1DAC		ECS91J2DAC		ECS91J4DAC		ECS91J6DAC		ECS91J8DAC		
1.9A	200V	1/3	24V DC	30A	ECS91K1EAB		ECS91K2EAB		ECS91K4EAB		ECS91K6EAB		ECS91K8EAB		S752L02N3S
	230V	1/3			ECS91K1BAB		ECS91K2BAB		ECS91K4BAB		ECS91K6BAB		ECS91K8BAB		
	460V	3/4			ECS91K1CAC		ECS91K2CAC		ECS91K4CAC		ECS91K6CAC		ECS91K8CAC		
	575V	1			ECS91K1DAC		ECS91K2DAC		ECS91K4DAC		ECS91K6DAC		ECS91K8DAC		
4.4A	200V	3/4	24V DC	30A	ECS91L1EAB		ECS91L2EAB		ECS91L4EAB		ECS91L6EAB		ECS91L8EAB		S752L04N3S
	230V	3/4			ECS91L1BAB		ECS91L2BAB		ECS91L4BAB		ECS91L6BAB		ECS91L8BAB		
	460V	2			ECS91L1CAC		ECS91L2CAC		ECS91L4CAC		ECS91L6CAC		ECS91L8CAC		
	575V	3			ECS91L1DAC		ECS91L2DAC		ECS91L4DAC		ECS91L6DAC		ECS91L8DAC		
9A	200V	2	24V DC	30A	ECS91M1EAB		ECS91M2EAB		ECS91M4EAB		ECS91M6EAB		ECS91M8EAB		S752L09N3S
	230V	2			ECS91M1BAB		ECS91M2BAB		ECS91M4BAB		ECS91M6BAB		ECS91M8BAB		
	460V	5			ECS91M1CAC		ECS91M2CAC		ECS91M4CAC		ECS91M6CAC		ECS91M8CAC		
	575V	5			ECS91M1DAC		ECS91M2DAC		ECS91M4DAC		ECS91M6DAC		ECS91M8DAC		
16A	200V	3	24V DC	30A	ECS91N1EAB		ECS91N2EAB		ECS91N4EAB		ECS91N6EAB		ECS91N8EAB		S752L16N3S
	230V	3			ECS91N1BAB		ECS91N2BAB		ECS91N4BAB		ECS91N6BAB		ECS91N8BAB		
	460V	7-1/2			ECS91N1CAC		ECS91N2CAC		ECS91N4CAC		ECS91N6CAC		ECS91N8CAC		
	575V	10			ECS91N1DAC		ECS91N2DAC		ECS91N4DAC		ECS91N6DAC		ECS91N8DAC		
27A	200V	5	24V DC	60A	ECS91P1EAD		ECS91P2EAD		ECS91P4EAD		ECS91P6EAD		ECS91P8EAD		S752L27N3S
	230V	7-1/2			ECS91P1BAD		ECS91P2BAD		ECS91P4BAD		ECS91P6BAD		ECS91P8BAD		
	460V	15			ECS91P1CAE		ECS91P2CAE		ECS91P4CAE		ECS91P6CAE		ECS91P8CAE		
	575V	20			ECS91P1DAE		ECS91P2DAE		ECS91P4DAE		ECS91P6DAE		ECS91P8DAE		
50A	200V	10	24V DC	60A	ECS91R1EAD		ECS91R2EAD		ECS91R4EAD		ECS91R6EAD		ECS91R8EAD		S752L50N3S
	230V	10			ECS91R1BAD		ECS91R2BAD		ECS91R4BAD		ECS91R6BAD		ECS91R8BAD		
	460V	30			ECS91R1CAE		ECS91R2CAE		ECS91R4CAE		ECS91R6CAE		ECS91R8CAE		
	575V	40			ECS91R1DAE		ECS91R2DAE		ECS91R4DAE		ECS91R6DAE		ECS91R8DAE		

① hp Ratings are based on 40°C Ambient and:
- 25 sec. ramp — 2 starts/hr
- 15 sec. ramp — 4 starts/hr
- 10 sec. ramp — 6 starts/hr
- 7.5 sec. ramp — 8 starts/hr
- 3 sec. ramp — 15 starts/hr

For other ratings, consult your Eaton Representative.

② All *IT.* soft starters are furnished with 24V DC coils and control power supplies. For 24V DC separate control, use Mod Code **C35** and change the 8th digit to **Q** (i.e. ECS90S1**E**AA becomes ECS90S1**Q**AA-**C35**).

③ These are the Catalog Numbers for Type 4X 304-Grade Stainless Steel, as indicated by the seventh digit **4**. Example: ECS91J**4**EAA. To order Type 4X 316-Grade Stainless Steel, change that digit to **9**. To order Type 4 Painted Steel, change that digit to **3**. To order Nonmetallic, change that digit to **5**. For details on these Alternate Enclosures, see **PG03300001E**.

Cover Control ..... **Page 39-92**
Dimensions ..... **Page 39-103**
Wiring Diagrams ..... **Page 39-104**
Accessories **PG03300001E**
Modifications **PG03300001E**
Technical Data **PG03300001E**
Discount Symbol **1CD1**

Table 39-121. Class ECS91 — Combination Reduced Voltage Soft-Starter — Fusible Disconnect — S801

Amps	Motor Voltage	hp ①②	Coil Voltage ③	Switch Rating	Type 1		Type 3R		Type 4X ④		Type 12		Component Soft Starter (Open)
					Catalog Number	Price U.S. $	Catalog Number	Price U.S. $	Catalog Number	Price U.S. $	Catalog Number	Price U.S. $	Catalog Number
Frame Size — 65 mm													
37A	200V	3 10	24V DC	30A 60A	ECS91Q1EAB ECS91Q1EAD		ECS91Q2EAB ECS91Q2EAD		ECS91Q4EAB ECS91Q4EAD		ECS91Q8EAB ECS91Q8EAD		S801N37N3S
	230V	7-1/2 10		30A 60A	ECS91Q1BAB ECS91Q1BAD		ECS91Q2BAB ECS91Q2BAD		ECS91Q4BAB ECS91Q4BAD		ECS91Q8BAB ECS91Q8BAD		S801N37N3S
	460V	15 25		30A 60A	ECS91Q1CAC ECS91Q1CAE		ECS91Q2CAC ECS91Q2CAE		ECS91Q4CAC ECS91Q4CAE		ECS91Q8CAC ECS91Q8CAE		S801N37N3S
	575V	20 30		30A 60A	ECS91Q1DAC ECS91Q1DAE		ECS91Q2DAC ECS91Q2DAE		ECS91Q4DAC ECS91Q4DAE		ECS91Q8DAC ECS91Q8DAE		S801N37N3S
66A	200V	10 20	24V DC	60A 100A	ECS91S1EAD ECS91S1EAF		ECS91S2EAD ECS91S2EAF		ECS91S4EAD ECS91S4EAF		ECS91S8EAD ECS91S8EAF		S801N66N3S
	230V	15 20		60A 100A	ECS91S1BAD ECS91S1BAF		ECS91S2BAD ECS91S2BAF		ECS91S4BAD ECS91S4BAF		ECS91S8BAD ECS91S8BAF		S801N66N3S
	460V	50		100A	ECS91S1CAG		ECS91S2CAG		ECS91S4CAG		ECS91S8CAG		S801N66N3S
	575V	40 60		60A 100A	ECS91S1DAE ECS91S1DAG		ECS91S2DAE ECS91S2DAG		ECS91S4DAE ECS91S4DAG		ECS91S8DAE ECS91S8DAG		S801N66N3S
Frame Size — 110 mm													
105A	200V 230V 460V 575V	30 40 75 100	24V DC	200A 200A 200A 200A	ECS91V1EAH ECS91V1BAH ECS91V1CAJ ECS91V1DAJ		ECS91V2EAH ECS91V2BAH ECS91V2CAJ ECS91V2DAJ		ECS91V4EAH ECS91V4BAH ECS91V4CAJ ECS91V4DAJ		ECS91V8EAH ECS91V8BAH ECS91V8CAJ ECS91V8DAJ		S801R10N3S
135A	200V 230V 460V 575V	40 50 100 125	24V DC	200A 200A 200A 200A	ECS91W1EAH ECS91W1BAH ECS91W1CAJ ECS91W1DAJ		ECS91W2EAH ECS91W2BAH ECS91W2CAJ ECS91W2DAJ		ECS91W4EAH ECS91W4BAH ECS91W4CAJ ECS91W4DAJ		ECS91W8EAH ECS91W8BAH ECS91W8CAJ ECS91W8DAJ		S801R13N3S
Frame Size — 200 mm													
180A	200V 230V 460V 575V	60 60 150 150	24V DC	400A 400A 400A 400A	ECS91Y1EAK ECS91Y1BAK ECS91Y1CAL ECS91Y1DAL		ECS91Y2EAK ECS91Y2BAK ECS91Y2CAL ECS91Y2DAL		ECS91Y4EAK ECS91Y4BAK ECS91Y4CAL ECS91Y4DAL		ECS91Y8EAK ECS91Y8BAK ECS91Y8CAL ECS91Y8DAL		S801T18N3S
240A	200V 230V 460V 575V	75 75 200 200	24V DC	400A 400A 400A 400A	ECS91Z1EAK ECS91Z1BAK ECS91Z1CAL ECS91Z1DAL		ECS91Z2EAK ECS91Z2BAK ECS91Z2CAL ECS91Z2DAL		ECS91Z4EAK ECS91Z4BAK ECS91Z4CAL ECS91Z4DAL		ECS91Z8EAK ECS91Z8BAK ECS91Z8CAL ECS91Z8DAL		S801T24N3S
304A	200V 230V 460V 575V	100 100 250 300	24V DC	400A 400A 400A 400A	ECS9111EAK ECS9111BAK ECS9111CAL ECS9111DAL		ECS9112EAK ECS9112BAK ECS9112CAL ECS9112DAL		ECS9114EAK ECS9114BAK ECS9114CAL ECS9114DAL		ECS9118EAK ECS9118BAK ECS9118CAL ECS9118DAL		S801T30N3S
Frame Size — 290 mm													
360A	200V 230V 460V 575V	125 125 300 350	24V DC	600A 600A 600A 600A	ECS9121EAM ECS9121BAM ECS9121CAN ECS9121DAN		ECS9122EAM ECS9122BAM ECS9122CAN ECS9122DAN		ECS9124EAM ECS9124BAM ECS9124CAN ECS9124DAN		ECS9128EAM ECS9128BAM ECS9128CAN ECS9128DAN		S801V36N3S
420A	200V 230V 460V 575V	150 150 350 450	24V DC	600A 600A 600A 600A	ECS9131EAM ECS9131BAM ECS9131CAN ECS9131DAN		ECS9132EAM ECS9132BAM ECS9132CAN ECS9132DAN		ECS9134EAM ECS9134BAM ECS9134CAN ECS9134DAN		ECS9138EAM ECS9138BAM ECS9138CAN ECS9138DAN		S801V42N3S
500A	200V 230V 460V 575V	150 200 400 500	24V DC	800A 800A 800A 800A	ECS9141EAP ECS9141BAP ECS9141CAP ECS9141DAP		ECS9142EAP ECS9142BAP ECS9142CAP ECS9142DAP		ECS9144EAP ECS9144BAP ECS9144CAP ECS9144DAP		ECS9148EAP ECS9148BAP ECS9148CAP ECS9148DAP		S801V50N3S
650A	460V 575V	500 600	24V DC	800A 800A	ECS9151CAP ECS9151DAP		ECS9152CAP ECS9152DAP		ECS9154CAP ECS9154DAP		ECS9158CAP ECS9158DAP		S801V65N3S
720A	460V 575V	600 700	24V DC	1200A 1200A	ECS9161CAQ ECS9161DAQ		ECS9162CAQ ECS9162DAQ		ECS9164CAQ ECS9164DAQ		ECS9168CAQ ECS9168DAQ		S801V72N3S
850A	460V 575V	700 800	24V DC	1600A 1600A	ECS9171CAR ECS9171DAR		ECS9172CAR ECS9172DAR		ECS9174CAR ECS9174DAR		ECS9178CAR ECS9178DAR		S801V85N3S
1000A	230V 460V 575V	400 800 1000	24V DC	⑤ ⑤ ⑤	ECS9181BA_ ⑤ ECS9181CA_ ⑤ ECS9181DA_ ⑤		ECS9182BA_ ⑤ ECS9182CA_ ⑤ ECS9182DA_ ⑤		ECS9184BA_ ⑤ ECS9184CA_ ⑤ ECS9184DA_ ⑤		ECS9188BA_ ⑤ ECS9188CA_ ⑤ ECS9188DA_ ⑤		S801V10N3S

① Standard duty horsepower ratings are for 300% ramp current, 30 seconds ramp time, and 3 starts per hour. Consult Eaton for other ratings.

② Based on 1.0 Service Factor. For 1.15 consult Eaton.

③ All *IT.* soft starters are furnished with 24V DC coils and control power supplies. For 24V DC separate control, use Mod Code **C35** and change the 8th digit to **Q** (i.e. ECS90S1**E**AA becomes ECS90S1**Q**AA-**C35**).

④ These are the Catalog Numbers for Type 4X 304-Grade Stainless Steel, as indicated by the seventh digit **4**. Example: ECS91S**4**EAA. To order Type 4X 316-Grade Stainless Steel, change that digit to **9**. To order Type 4 Painted Steel, change that digit to **3**. To order Nonmetallic, change that digit to **5**. For details on these Alternate Enclosures, see **PG03300001E**.

⑤ Consult Eaton.

Cover Control ..... **Page 39-92**
Dimensions ..... **Page 39-103**
Wiring Diagrams ..... **Page 39-104**
Accessories **PG03300001E**
Modifications **PG03300001E**
Technical Data **PG03300001E**
Discount Symbol **1CD1**

Table 39-122. Class ECS94 — Combination Reduced Voltage Soft-Starter — Fusible Disconnect — S811 ①

Amps	Motor Voltage	hp ②③	Coil Voltage ④	Switch Rating	Type 1		Type 3R		Type 4X ⑤		Type 12		Component Soft Starter (Open)
					Catalog Number	Price U.S. $	Catalog Number	Price U.S. $	Catalog Number	Price U.S. $	Catalog Number	Price U.S. $	Catalog Number
Frame Size — 65 mm													
37A	200V	3 10	24V DC	30A 60A	ECS94Q1EAB ECS94Q1EAD		ECS94Q2EAB ECS94Q2EAD		ECS94Q4EAB ECS94Q4EAD		ECS94Q8EAB ECS94Q8EAD		S811N37N3S
	230V	7-1/2 10		30A 60A	ECS94Q1BAB ECS94Q1BAD		ECS94Q2BAB ECS94Q2BAD		ECS94Q4BAB ECS94Q4BAD		ECS94Q8BAB ECS94Q8BAD		S811N37N3S
	460V	15 25		30A 60A	ECS94Q1CAC ECS94Q1CAE		ECS94Q2CAC ECS94Q2CAE		ECS94Q4CAC ECS94Q4CAE		ECS94Q8CAC ECS94Q8CAE		S811N37N3S
	575V	20 30		30A 60A	ECS94Q1DAC ECS94Q1DAE		ECS94Q2DAC ECS94Q2DAE		ECS94Q4DAC ECS94Q4DAE		ECS94Q8DAC ECS94Q8DAE		S811N37N3S
66A	200V	10 20	24V DC	60A 100A	ECS94S1EAD ECS94S1EAF		ECS94S2EAD ECS94S2EAF		ECS94S4EAD ECS94S4EAF		ECS94S8EAD ECS94S8EAF		S811N66N3S
	230V	15 20		60A 100A	ECS94S1BAD ECS94S1BAF		ECS94S2BAD ECS94S2BAF		ECS94S4BAD ECS94S4BAF		ECS94S8BAD ECS94S8BAF		S811N66N3S
	460V	50		100A	ECS94S1CAG		ECS94S2CAG		ECS94S4CAG		ECS94S8CAG		S811N66N3S
	575V	40 60		60A 100A	ECS94S1DAE ECS94S1DAG		ECS94S2DAE ECS94S2DAG		ECS94S4DAE ECS94S4DAG		ECS94S8DAE ECS94S8DAG		S811N66N3S
Frame Size — 110 mm													
105A	200V 230V 460V 575V	30 40 75 100	24V DC	200A 200A 200A 200A	ECS94V1EAH ECS94V1BAH ECS94V1CAJ ECS94V1DAJ		ECS94V2EAH ECS94V2BAH ECS94V2CAJ ECS94V2DAJ		ECS94V4EAH ECS94V4BAH ECS94V4CAJ ECS94V4DAJ		ECS94V8EAH ECS94V8BAH ECS94V8CAJ ECS94V8DAJ		S811R10N3S
135A	200V 230V 460V 575V	40 50 100 125	24V DC	200A 200A 200A 200A	ECS94W1EAH ECS94W1BAH ECS94W1CAJ ECS94W1DAJ		ECS94W2EAH ECS94W2BAH ECS94W2CAJ ECS94W2DAJ		ECS94W4EAH ECS94W4BAH ECS94W4CAJ ECS94W4DAJ		ECS94W8EAH ECS94W8BAH ECS94W8CAJ ECS94W8DAJ		S811R13N3S
Frame Size — 200 mm													
180A	200V 230V 460V 575V	60 60 150 150	24V DC	400A 400A 400A 400A	ECS94Y1EAK ECS94Y1BAK ECS94Y1CAL ECS94Y1DAL		ECS94Y2EAK ECS94Y2BAK ECS94Y2CAL ECS94Y2DAL		ECS94Y4EAK ECS94Y4BAK ECS94Y4CAL ECS94Y4DAL		ECS94Y8EAK ECS94Y8BAK ECS94Y8CAL ECS94Y8DAL		S811T18N3S
240A	200V 230V 460V 575V	75 75 200 200	24V DC	400A 400A 400A 400A	ECS94Z1EAK ECS94Z1BAK ECS94Z1CAL ECS94Z1DAL		ECS94Z2EAK ECS94Z2BAK ECS94Z2CAL ECS94Z2DAL		ECS94Z4EAK ECS94Z4BAK ECS94Z4CAL ECS94Z4DAL		ECS94Z8EAK ECS94Z8BAK ECS94Z8CAL ECS94Z8DAL		S811T24N3S
304A	200V 230V 460V 575V	100 100 250 300	24V DC	400A 400A 400A 400A	ECS9411EAK ECS9411BAK ECS9411CAL ECS9411DAL		ECS9412EAK ECS9412BAK ECS9412CAL ECS9412DAL		ECS9414EAK ECS9414BAK ECS9414CAL ECS9414DAL		ECS9418EAK ECS9418BAK ECS9418CAL ECS9418DAL		S811T30N3S
Frame Size — 290 mm													
360A	200V 230V 460V 575V	125 125 300 350	24V DC	600A 600A 600A 600A	ECS9421EAM ECS9421BAM ECS9421CAN ECS9421DAN		ECS9422EAM ECS9422BAM ECS9422CAN ECS9422DAN		ECS9424EAM ECS9424BAM ECS9424CAN ECS9424DAN		ECS9428EAM ECS9428BAM ECS9428CAN ECS9428DAN		S811V36N3S
420A	200V 230V 460V 575V	150 150 350 450	24V DC	600A 600A 600A 600A	ECS9431EAM ECS9431BAM ECS9431CAN ECS9431DAN		ECS9432EAM ECS9432BAM ECS9432CAN ECS9432DAN		ECS9434EAM ECS9434BAM ECS9434CAN ECS9434DAN		ECS9438EAM ECS9438BAM ECS9438CAN ECS9438DAN		S811V42N3S
500A	200V 230V 460V 575V	150 200 400 500	24V DC	800A 800A 800A 800A	ECS9441EAP ECS9441BAP ECS9441CAP ECS9441DAP		ECS9442EAP ECS9442BAP ECS9442CAP ECS9442DAP		ECS9444EAP ECS9444BAP ECS9444CAP ECS9444DAP		ECS9448EAP ECS9448BAP ECS9448CAP ECS9448DAP		S811V50N3S
650A	460V 575V	500 600	24V DC	800A 800A	ECS9451CAP ECS9451DAP		ECS9452CAP ECS9452DAP		ECS9454CAP ECS9454DAP		ECS9458CAP ECS9458DAP		S811V65N3S
720A	460V 575V	600 700	24V DC	1200A 1200A	ECS9461CAQ ECS9461DAQ		ECS9462CAQ ECS9462DAQ		ECS9464CAQ ECS9464DAQ		ECS9468CAQ ECS9468DAQ		S811V72N3S
850A	460V 575V	700 800	24V DC	1600A 1600A	ECS9471CAR ECS9471DAR		ECS9472CAR ECS9472DAR		ECS9474CAR ECS9474DAR		ECS9478CAR ECS9478DAR		S811V85N3S
1000A	230V 460V 575V	400 800 1000	24V DC	⑤ ⑤ ⑤	ECS9481BA_ ⑥ ECS9481CA_ ⑥ ECS9481DA_ ⑥		ECS9482BA_ ⑥ ECS9482CA_ ⑥ ECS9482DA_ ⑥		ECS9484BA_ ⑥ ECS9484CA_ ⑥ ECS9484DA_ ⑥		ECS9488BA_ ⑥ ECS9488CA_ ⑥ ECS9488DA_ ⑥		S811V10N3S

① Digital Interface Module (DIM) is mounted on door as standard.

② Standard duty horsepower ratings are for 300% ramp current, 30 seconds ramp time, and 3 starts per hour. Consult Eaton for other ratings.

③ Based on 1.0 Service Factor. For 1.15 consult Eaton.

④ All *IT.* soft starters are furnished with 24V DC coils and control power supplies. For 24V DC separate control, use Mod Code **C35** and change the 8th digit to **Q** (i.e. ECS90S1**E**AA becomes ECS90S1**Q**AA-**C35**).

⑤ These are the Catalog Numbers for Type 4X 304-Grade Stainless Steel, as indicated by the seventh digit **4**. Example: ECS94Q**4**EAA. To order Type 4X 316-Grade Stainless Steel, change that digit to **9**. To order Type 4 Painted Steel, change that digit to **3**. To order Nonmetallic, change that digit to **5**. For details on these Alternate Enclosures, see **PG03300001E**.

⑥ Consult Eaton.

Cover Control ..... **Page 39-92**
Dimensions ..... **Page 39-103**
Wiring Diagrams ..... **Page 39-104**
Accessories **PG03300001E**
Modifications **PG03300001E**
Technical Data **PG03300001E**
Discount Symbol **1CD1**

Type 12 HMCP Combination IT. S801 Soft Starter

Product Selection

Table 39-123. Class ECS92 — Combination Reduced Voltage Soft-Starter — Circuit Breaker — S752

Amps	Motor Voltage	hp ①	Coil Voltage ②	Circuit Breaker	Type 1		Type 3R		Type 4X ③		Type 7/9		Type 12		Component Soft Starter (Open)
					Catalog Number	Price U.S. $	Catalog Number	Price U.S. $	Catalog Number	Price U.S. $	Catalog Number	Price U.S. $	Catalog Number	Price U.S. $	Catalog Number
Frame Size — 54 mm															
.8A	200V	1/8	24V DC	3A	**ECS92J1EAB**		**ECS92J2EAB**		**ECS92J4EAB**		**ECS92J6EAB**		**ECS92J8EAB**		**S752L01N3S**
	230V	1/6		3A	**ECS92J1BAB**		**ECS92J2BAB**		**ECS92J4BAB**		**ECS92J6BAB**		**ECS92J8BAB**		
	460V	1/3		3A	**ECS92J1CAB**		**ECS92J2CAB**		**ECS92J4CAB**		**ECS92J6CAB**		**ECS92J8CAB**		
	575V	1/3		3A	**ECS92J1DAB**		**ECS92J2DAB**		**ECS92J4DAB**		**ECS92J6DAB**		**ECS92J8DAB**		
1.9A	200V	1/3	24V DC	3A	**ECS92K1EAB**		**ECS92K2EAB**		**ECS92K4EAB**		**ECS92K6EAB**		**ECS92K8EAB**		**S752L02N3S**
	230V	1/3		3A	**ECS92K1BAB**		**ECS92K2BAB**		**ECS92K4BAB**		**ECS92K6BAB**		**ECS92K8BAB**		
	460V	3/4		3A	**ECS92K1CAB**		**ECS92K2CAB**		**ECS92K4CAB**		**ECS92K6CAB**		**ECS92K8CAB**		
	575V	1		3A	**ECS92K1DAB**		**ECS92K2DAB**		**ECS92K4DAB**		**ECS92K6DAB**		**ECS92K8DAB**		
4.4A	200V	3/4	24V DC	7A	**ECS92L1EAC**		**ECS92L2EAC**		**ECS92L4EAC**		**ECS92L6EAC**		**ECS92L8EAC**		**S752L04N3S**
	230V	3/4		7A	**ECS92L1BAC**		**ECS92L2BAC**		**ECS92L4BAC**		**ECS92L6BAC**		**ECS92L8BAC**		
	460V	2		7A	**ECS92L1CAC**		**ECS92L2CAC**		**ECS92L4CAC**		**ECS92L6CAC**		**ECS92L8CAC**		
	575V	3		7A	**ECS92L1DAC**		**ECS92L2DAC**		**ECS92L4DAC**		**ECS92L6DAC**		**ECS92L8DAC**		
9A	200V	2	24V DC	15A	**ECS92M1EAD**		**ECS92M2EAD**		**ECS92M4EAD**		**ECS92M6EAD**		**ECS92M8EAD**		**S752L09N3S**
	230V	2		15A	**ECS92M1BAD**		**ECS92M2BAD**		**ECS92M4BAD**		**ECS92M6BAD**		**ECS92M8BAD**		
	460V	5		15A	**ECS92M1CAD**		**ECS92M2CAD**		**ECS92M4CAD**		**ECS92M6CAD**		**ECS92M8CAD**		
	575V	5		15A	**ECS92M1DAD**		**ECS92M2DAD**		**ECS92M4DAD**		**ECS92M6DAD**		**ECS92M8DAD**		
16A	200V	3	24V DC	15A	**ECS92N1EAD**		**ECS92N2EAD**		**ECS92N4EAD**		**ECS92N6EAD**		**ECS92N8EAD**		**S752L16N3S**
	230V	3		15A	**ECS92N1BAD**		**ECS92N2BAD**		**ECS92N4BAD**		**ECS92N6BAD**		**ECS92N8BAD**		
	460V	7-1/2		30A	**ECS92N1CAE**		**ECS92N2CAE**		**ECS92N4CAE**		**ECS92N6CAE**		**ECS92N8CAE**		
	575V	10		30A	**ECS92N1DAE**		**ECS92N2DAE**		**ECS92N4DAE**		**ECS92N6DAE**		**ECS92N8DAE**		
27A	200V	5	24V DC	30A	**ECS92P1EAE**		**ECS92P2EAE**		**ECS92P4EAE**		**ECS92P6EAE**		**ECS92P8EAE**		**S752L27N3S**
	230V	7-1/2		30A	**ECS92P1BAE**		**ECS92P2BAE**		**ECS92P4BAE**		**ECS92P6BAE**		**ECS92P8BAE**		
	460V	15		50A	**ECS92P1CAF**		**ECS92P2CAF**		**ECS92P4CAF**		**ECS92P6CAF**		**ECS92P8CAF**		
	575V	20		50A	**ECS92P1DAF**		**ECS92P2DAF**		**ECS92P4DAF**		**ECS92P6DAF**		**ECS92P8DAF**		
50A	200V	10	24V DC	100A	**ECS92R1EAG**		**ECS92R2EAG**		**ECS92R4EAG**		**ECS92R6EAG**		**ECS92R8EAG**		**S752L50N3S**
	230V	10		100A	**ECS92R1BAG**		**ECS92R2BAG**		**ECS92R4BAG**		**ECS92R6BAG**		**ECS92R8BAG**		
	460V	30		100A	**ECS92R1CAG**		**ECS92R2CAG**		**ECS92R4CAG**		**ECS92R6CAG**		**ECS92R8CAG**		
	575V	40		100A	**ECS92R1DAG**		**ECS92R2DAG**		**ECS92R4DAG**		**ECS92R6DAG**		**ECS92R8DAG**		

① hp Ratings are based on 40°C Ambient and:
- 25 sec. ramp — 2 starts/hr
- 15 sec. ramp — 4 starts/hr
- 10 sec. ramp — 6 starts/hr
- 7.5 sec. ramp — 8 starts/hr
- 3 sec. ramp — 15 starts/hr

For other ratings, consult your Eaton Representative.

② All *IT.* soft starters are furnished with 24V DC coils and control power supplies. For 24V DC separate control, use Mod Code **C35** and change the 8th digit to **Q** (i.e. ECS90S1**E**AA becomes ECS90S1**Q**AA-**C35**).

③ These are the Catalog Numbers for Type 4X 304-Grade Stainless Steel, as indicated by the seventh digit **4**. Example: ECS92J**4**EAA. To order Type 4X 316-Grade Stainless Steel, change that digit to **9**. To order Type 4 Painted Steel, change that digit to **3**. To order Nonmetallic, change that digit to **5**. For details on these Alternate Enclosures, see **PG03300001E**.

Cover Control ..... **Page 39-92**
Dimensions ..... **Page 39-103**
Wiring Diagrams ..... **Page 39-104**
Accessories **PG03300001E**
Modifications **PG03300001E**
Technical Data **PG03300001E**
Discount Symbol **1CD1**

Table 39-124. Class ECS92 — Combination Reduced Voltage Soft-Starter — Circuit Breaker — S801

Amps	Motor Voltage	hp ①② 1.0 S.F.	Coil Voltage ③	Circuit Breaker Type	Type 1		Type 3R		Type 4X ④		Type 7/9		Type 12		Component Soft Starter (Open)
					Catalog Number	Price U.S. $	Catalog Number	Price U.S. $	Catalog Number	Price U.S. $	Catalog Number	Price U.S. $	Catalog Number	Price U.S. $	Catalog Number
Frame Size — 65 mm															
37A	200V	1/2 1 3 10	24V DC	7A 15A 30A 50A	ECS92Q1EAC ECS92Q1EAD ECS92Q1EAE ECS92Q1EAF		ECS92Q2EAC ECS92Q2EAD ECS92Q2EAE ECS92Q2EAF		ECS92Q4EAC ECS92Q4EAD ECS92Q4EAE ECS92Q4EAF		ECS92Q6EAC ECS92Q6EAD ECS92Q6EAE ECS92Q6EAF		ECS92Q8EAC ECS92Q8EAD ECS92Q8EAE ECS92Q8EAF		S801N37N3S
	230V	1 2 3 10	24V DC	7A 15A 30A 50A	ECS92Q1BAC ECS92Q1BAD ECS92Q1BAE ECS92Q1BAF		ECS92Q2BAC ECS92Q2BAD ECS92Q2BAE ECS92Q2BAF		ECS92Q4BAC ECS92Q4BAD ECS92Q4BAE ECS92Q4BAF		ECS92Q6BAC ECS92Q6BAD ECS92Q6BAE ECS92Q6BAF		ECS92Q8BAC ECS92Q8BAD ECS92Q8BAE ECS92Q8BAF		S801N37N3S
	460V	3/4 2 5 10 25	24V DC	3A 7A 15A 30A 50A	ECS92Q1CAB ECS92Q1CAC ECS92Q1CAD ECS92Q1CAE ECS92Q1CAF		ECS92Q2CAB ECS92Q2CAC ECS92Q2CAD ECS92Q2CAE ECS92Q2CAF		ECS92Q4CAB ECS92Q4CAC ECS92Q4CAD ECS92Q4CAE ECS92Q4CAF		ECS92Q6CAB ECS92Q6CAC ECS92Q6CAD ECS92Q6CAE ECS92Q6CAF		ECS92Q8CAB ECS92Q8CAC ECS92Q8CAD ECS92Q8CAE ECS92Q8CAF		S801N37N3S
	575V	1 3 7-1/2 15 30	24V DC	3A 7A 15A 30A 50A	ECS92Q1DAB ECS92Q1DAC ECS92Q1DAD ECS92Q1DAE ECS92Q1DAF		ECS92Q2DAB ECS92Q2DAC ECS92Q2DAD ECS92Q2DAE ECS92Q2DAF		ECS92Q4DAB ECS92Q4DAC ECS92Q4DAD ECS92Q4DAE ECS92Q4DAF		ECS92Q6DAB ECS92Q6DAC ECS92Q6DAD ECS92Q6DAE ECS92Q6DAF		ECS92Q8DAB ECS92Q8DAC ECS92Q8DAD ECS92Q8DAE ECS92Q8DAF		S801N37N3S
66A	200V	20	24V DC	100A	ECS92S1EAG		ECS92S2EAG		ECS92S4EAG		ECS92S6EAG		ECS92S8EAG		S801N66N3S
	230V	15 20	24V DC	70A 100A	ECS92S1BAW ECS92S1BAG		ECS92S2BAW ECS92S2BAG		ECS92S4BAW ECS92S4BAG		ECS92S6BAW ECS92S6BAG		ECS92S8BAW ECS92S8BAG		S801N66N3S
	460V	50	24V DC	100A	ECS92S1CAG		ECS92S2CAG		ECS92S4CAG		ECS92S6CAG		ECS92S8CAG		S801N66N3S
	575V	60	24V DC	100A	ECS92S1DAG		ECS92S2DAG		ECS92S4DAG		ECS92S6DAG		ECS92S8DAG		S801N66N3S
Frame Size — 110 mm															
105A	200V	30	24V DC	150A	ECS92V1EAH		ECS92V2EAH		ECS92V4EAH		ECS92V6EAH		ECS92V8EAH		S801R10N3S
	230V	40	24V DC	150A	ECS92V1BAH		ECS92V2BAH		ECS92V4BAH		ECS92V6BAH		ECS92V8BAH		S801R10N3S
	460V	75	24V DC	150A	ECS92V1CAH		ECS92V2CAH		ECS92V4CAH		ECS92V6CAH		ECS92V8CAH		S801R10N3S
	575V	100	24V DC	150A	ECS92V1DAH		ECS92V2DAH		ECS92V4DAH		ECS92V6DAH		ECS92V8DAH		S801R10N3S
135A	200V 230V 460V 575V	40 50 100 125	24V DC	150A 150A 150A 150A	ECS92W1EAH ECS92W1BAH ECS92W1CAH ECS92W1DAH		ECS92W2EAH ECS92W2BAH ECS92W2CAH ECS92W2DAH		ECS92W4EAH ECS92W4BAH ECS92W4CAH ECS92W4DAH		ECS92W6EAH ECS92W6BAH ECS92W6CAH ECS92W6DAH		ECS92W8EAH ECS92W8BAH ECS92W8CAH ECS92W8DAH		S801R13N3S
Frame Size — 200 mm															
180A	200V 230V 460V 575V	60 60 150 150	24V DC	250A 250A 250A 250A	ECS92Y1EAJ ECS92Y1BAJ ECS92Y1CAJ ECS92Y1DAJ		ECS92Y2EAJ ECS92Y2BAJ ECS92Y2CAJ ECS92Y2DAJ		ECS92Y4EAJ ECS92Y4BAJ ECS92Y4CAJ ECS92Y4DAJ		ECS92Y6EAJ ECS92Y6BAJ ECS92Y6CAJ ECS92Y6DAJ		ECS92Y8EAJ ECS92Y8BAJ ECS92Y8CAJ ECS92Y8DAJ		S801T18N3S
240A	200V 230V 460V 575V	75 75 200 200	24V DC	400A 250A 400A 250A	ECS92Z1EAK ECS92Z1BAJ ECS92Z1CAK ECS92Z1DAJ		ECS92Z2EAK ECS92Z2BAJ ECS92Z2CAK ECS92Z2DAJ		ECS92Z4EAK ECS92Z4BAJ ECS92Z4CAK ECS92Z4DAJ		ECS92Z6EAK ECS92Z6BAJ ECS92Z6CAK ECS92Z6DAJ		ECS92Z8EAK ECS92Z8BAJ ECS92Z8CAK ECS92Z8DAJ		S801T24N3S
304A	200V 230V 460V 575V	100 100 250 300	24V DC	400A 400A 400A 400A	ECS9211EAK ECS9211BAK ECS9211CAK ECS9211DAK		ECS9212EAK ECS9212BAK ECS9212CAK ECS9212DAK		ECS9214EAK ECS9214BAK ECS9214CAK ECS9214DAK		ECS9216EAK ECS9216BAK ECS9216CAK ECS9216DAK		ECS9218EAK ECS9218BAK ECS9218CAK ECS9218DAK		S801T30N3S

① Standard duty horsepower ratings are for 300% ramp current, 30 seconds ramp time, and 3 starts per hour. Consult Eaton for other ratings.

② Based on 1.0 Service Factor. For 1.15 consult Eaton.

③ All *IT.* soft starters are furnished with 24V DC coils and control power supplies. For 24V DC separate control, use Mod Code **C35** and change the 8th digit to **Q** (i.e. ECS90S1**E**AA becomes ECS90S1**Q**AA-**C35**).

④ These are the Catalog Numbers for Type 4X 304-Grade Stainless Steel, as indicated by the seventh digit **4**. Example: ECS92Q**4**EAA. To order Type 4X 316-Grade Stainless Steel, change that digit to **9**. To order Type 4 Painted Steel, change that digit to **3**. To order Nonmetallic, change that digit to **5**. For details on these Alternate Enclosures, see **PG03300001E**.

Cover Control ..... **Page 39-92**
Dimensions ..... **Page 39-103**
Wiring Diagrams ..... **Page 39-104**
Accessories **PG03300001E**
Modifications **PG03300001E**
Technical Data **PG03300001E**
Discount Symbol **1CD1**

Table 39-124. Class ECS92 — Combination Reduced Voltage Soft-Starter — Circuit Breaker — S801 (Continued)

Amps	Motor Voltage	hp ①② 1.0 S.F.	Coil Voltage ③	Circuit Breaker Type	Type 1		Type 3R		Type 4X ④		Type 7/9		Type 12		Component Soft Starter (Open)
					Catalog Number	Price U.S. $	Catalog Number	Price U.S. $	Catalog Number	Price U.S. $	Catalog Number	Price U.S. $	Catalog Number	Price U.S. $	Catalog Number
Frame Size — 290 mm															
360A	200V	125	24V DC	HMCP 600A	**ECS9221EAL**		**ECS9222EAL**		**ECS9224EAL**		—		**ECS9228EAL**		**S801V36N3S**
	230V	150		HMCP 400A	**ECS9221BAK**		**ECS9222BAK**		**ECS9224BAK**		—		**ECS9228BAK**		
	460V	300		HMCP 600A	**ECS9221CAL**		**ECS9222CAL**		**ECS9224CAL**		—		**ECS9228CAL**		
	575V	350		HMCP 400A	**ECS9221DAK**		**ECS9222DAK**		**ECS9224DAK**		—		**ECS9228DAK**		
420A	200V	150	24V DC	HMCP 600A	**ECS9231EAL**		**ECS9232EAL**		**ECS9234EAL**		—		**ECS9238EAL**		**S801V42N3S**
	460V	350		HMCP 600A	**ECS9231CAL**		**ECS9232CAL**		**ECS9234CAL**		—		**ECS9238CAL**		
	575V	450		HMCP 600A	**ECS9231DAL**		**ECS9232DAL**		**ECS9234DAL**		—		**ECS9238DAL**		
500A	230V	200	24V DC	HMCP 600A	**ECS9241BAL**		**ECS9242BAL**		**ECS9244BAL**		—		**ECS9248BAL**		**S801V50N3S**
	460V	400		HMCP 600A	**ECS9241CAL**		**ECS9242CAL**		**ECS9244CAL**		—		**ECS9248CAL**		
	575V	500		HMCP 600A	**ECS9241DAL**		**ECS9242DAL**		**ECS9244DAL**		—		**ECS9248DAL**		
650A	200V	200	24V DC	HMCP 1200A	**ECS9251EAP**		**ECS9252EAP**		**ECS9254EAP**		—		**ECS9258EAP**		**S801V65N3S**
	230V	250		HMCP 1200A	**ECS9251BAP**		**ECS9252BAP**		**ECS9254BAP**		—		**ECS9258BAP**		
	460V	450		HMCP 600A	**ECS9251CAL**		**ECS9252CAL**		**ECS9254CAL**		—		**ECS9258CAL**		
	460V	500		HMCP 1200A	**ECS9251CAP**		**ECS9252CAP**		**ECS9254CAP**		—		**ECS9258CAP**		
	575V	600		HMCP 1200A	**ECS9251DAP**		**ECS9252DAP**		**ECS9254DAP**		—		**ECS9258DAP**		
720A	230V	300	24V DC	HMCP 1200A	**ECS9261BAP**		**ECS9262BAP**		**ECS9264BAP**		—		**ECS9268BAP**		**S801V72N3S**
	460V	600		HMCP 1200A	**ECS9261CAP**		**ECS9262CAP**		**ECS9264CAP**		—		**ECS9268CAP**		
	575V	700		HMCP 1200A	**ECS9261DAP**		**ECS9262DAP**		**ECS9264DAP**		—		**ECS9268DAP**		
850A	460V	700	24V DC	HMCP 1200A	**ECS9271CAP**		**ECS9272CAP**		**ECS9274CAP**		—		**ECS9278CAP**		**S801V85N3S**
	575V	800		HMCP 1200A	**ECS9271DAP**		**ECS9272DAP**		**ECS9274DAP**		—		**ECS9278DAP**		
1000A	230V	400	24V DC	RD 1600	**ECS9281BAQ**		**ECS9282BAQ**		**ECS9284BAQ**		—		**ECS9288BAQ**		**S801V10N3S**
	460V	800		RD 1600	**ECS9281CAQ**		**ECS9282CAQ**		**ECS9284CAQ**		—		**ECS9288CAQ**		
	575V	1000		RD 1600	**ECS9281DAQ**		**ECS9282DAQ**		**ECS9284DAQ**		—		**ECS9288DAQ**		

① Standard duty horsepower ratings are for 300% ramp current, 30 seconds ramp time, and 3 starts per hour. Consult Eaton for other ratings.

② Based on 1.0 Service Factor. For 1.15 consult Eaton.

③ All *IT.* soft starters are furnished with 24V DC coils and control power supplies. For 24V DC separate control, use Mod Code **C35** and change the 8th digit to **Q** (i.e. ECS92S1**E**AF becomes ECS92S1**Q**AF-**C35**).

④ These are the Catalog Numbers for Type 4X 304-Grade Stainless Steel, as indicated by the seventh digit **4**. Example: ECS92Q**4**EAA. To order Type 4X 316-Grade Stainless Steel, change that digit to **9**. To order Type 4 Painted Steel, change that digit to **3**. To order Nonmetallic, change that digit to **5**. For details on these Alternate Enclosures, see **PG03300001E**.

Cover Control ..... **Page 39-92**
Dimensions ..... **Page 39-103**
Wiring Diagrams ..... **Page 39-104**
Accessories **PG03300001E**
Modifications **PG03300001E**
Technical Data **PG03300001E**
Discount Symbol **1CD1**

Table 39-125. Class ECS95 — Combination Reduced Voltage Soft-Starter — Circuit Breaker — S811 ①

Amps	Motor Voltage	hp ②③ 1.0 S.F.	Coil Voltage ④	Circuit Breaker Type	Type 1		Type 3R		Type 4X ⑤		Type 7/9		Type 12		Component Soft Starter (Open)
					Catalog Number	Price U.S. $	Catalog Number	Price U.S. $	Catalog Number	Price U.S. $	Catalog Number	Price U.S. $	Catalog Number	Price U.S. $	Catalog Number
Frame Size — 65 mm															
37A	200V	1/2 1 3 10	24V DC	7A 15A 30A 50A	ECS95Q1EAC ECS95Q1EAD ECS95Q1EAE ECS95Q1EAF		ECS95Q2EAC ECS95Q2EAD ECS95Q2EAE ECS95Q2EAF		ECS95Q4EAC ECS95Q4EAD ECS95Q4EAE ECS95Q4EAF		ECS95Q6EAC ECS95Q6EAD ECS95Q6EAE ECS95Q6EAF		ECS95Q8EAC ECS95Q8EAD ECS95Q8EAE ECS95Q8EAF		S811N37N3S
	230V	1 2 3 10	24V DC	7A 15A 30A 50A	ECS95Q1BAC ECS95Q1BAD ECS95Q1BAE ECS95Q1BAF		ECS95Q2BAC ECS95Q2BAD ECS95Q2BAE ECS95Q2BAF		ECS95Q4BAC ECS95Q4BAD ECS95Q4BAE ECS95Q4BAF		ECS95Q6BAC ECS95Q6BAD ECS95Q6BAE ECS95Q6BAF		ECS95Q8BAC ECS95Q8BAD ECS95Q8BAE ECS95Q8BAF		S811N37N3S
	460V	3/4 2 5 10 25	24V DC	3A 7A 15A 30A 50A	ECS95Q1CAB ECS95Q1CAC ECS95Q1CAD ECS95Q1CAE ECS95Q1CAF		ECS95Q2CAB ECS95Q2CAC ECS95Q2CAD ECS95Q2CAE ECS95Q2CAF		ECS95Q4CAB ECS95Q4CAC ECS95Q4CAD ECS95Q4CAE ECS95Q4CAF		ECS95Q6CAB ECS95Q6CAC ECS95Q6CAD ECS95Q6CAE ECS95Q6CAF		ECS95Q8CAB ECS95Q8CAC ECS95Q8CAD ECS95Q8CAE ECS95Q8CAF		S811N37N3S
	575V	1 3 7-1/2 15 30	24V DC	3A 7A 15A 30A 50A	ECS95Q1DAB ECS95Q1DAC ECS95Q1DAD ECS95Q1DAE ECS95Q1DAF		ECS95Q2DAB ECS95Q2DAC ECS95Q2DAD ECS95Q2DAE ECS95Q2DAF		ECS95Q4DAB ECS95Q4DAC ECS95Q4DAD ECS95Q4DAE ECS95Q4DAF		ECS95Q6DAB ECS95Q6DAC ECS95Q6DAD ECS95Q6DAE ECS95Q6DAF		ECS95Q8DAB ECS95Q8DAC ECS95Q8DAD ECS95Q8DAE ECS95Q8DAF		S811N37N3S
66A	200V	10 20	24V DC	50A 100A	ECS95S1EAF ECS95S1EAG		ECS95S2EAF ECS95S2EAG		ECS95S4EAF ECS95S4EAG		ECS95S6EAF ECS95S6EAG		ECS95S8EAF ECS95S8EAG		S811N66N3S
	230V	15 20	24V DC	70A 100A	ECS95S1BAW ECS95S1BAG		ECS95S2BAW ECS95S2BAG		ECS95S4BAW ECS95S4BAG		ECS95S6BAW ECS95S6BAG		ECS95S8BAW ECS95S8BAG		S811N66N3S
	460V	50	24V DC	100A	ECS95S1CAG		ECS95S2CAG		ECS95S4CAG		ECS95S6CAG		ECS95S8CAG		S811N66N3S
	575V	60	24V DC	100A	ECS95S1DAG		ECS95S2DAG		ECS95S4DAG		ECS95S6DAG		ECS95S8DAG		S811N66N3S
Frame Size — 110 mm															
105A	200V	30	24V DC	150A	ECS95V1EAH		ECS95V2EAH		ECS95V4EAH		ECS95V6EAH		ECS95V8EAH		S811R10N3S
	230V	40	24V DC	150A	ECS95V1BAH		ECS95V2BAH		ECS95V4BAH		ECS95V6BAH		ECS95V8BAH		S811R10N3S
	460V	75	24V DC	150A	ECS95V1CAH		ECS95V2CAH		ECS95V4CAH		ECS95V6CAH		ECS95V8CAH		S811R10N3S
	575V	100	24V DC	150A	ECS95V1DAH		ECS95V2DAH		ECS95V4DAH		ECS95V6DAH		ECS95V8DAH		S811R10N3S
135A	200V 230V 460V 575V	40 50 100 125	24V DC	150A 150A 150A 150A	ECS95W1EAH ECS95W1BAH ECS95W1CAH ECS95W1DAH		ECS95W2EAH ECS95W2BAH ECS95W2CAH ECS95W2DAH		ECS95W4EAH ECS95W4BAH ECS95W4CAH ECS95W4DAH		ECS95W6EAH ECS95W6BAH ECS95W6CAH ECS95W6DAH		ECS95W8EAH ECS95W8BAH ECS95W8CAH ECS95W8DAH		S811R13N3S
Frame Size — 200 mm															
180A	200V 230V 460V 575V	60 60 150 150	24V DC	250A 250A 250A 250A	ECS95Y1EAJ ECS95Y1BAJ ECS95Y1CAJ ECS95Y1DAJ		ECS95Y2EAJ ECS95Y2BAJ ECS95Y2CAJ ECS95Y2DAJ		ECS95Y4EAJ ECS95Y4BAJ ECS95Y4CAJ ECS95Y4DAJ		ECS95Y6EAJ ECS95Y6BAJ ECS95Y6CAJ ECS95Y6DAJ		ECS95Y8EAJ ECS95Y8BAJ ECS95Y8CAJ ECS95Y8DAJ		S811T18N3S
240A	200V 230V 460V 575V	75 75 200 200	24V DC	400A 250A 400A 250A	ECS95Z1EAK ECS95Z1BAJ ECS95Z1CAK ECS95Z1DAJ		ECS95Z2EAK ECS95Z2BAJ ECS95Z2CAK ECS95Z2DAJ		ECS95Z4EAK ECS95Z4BAJ ECS95Z4CAK ECS95Z4DAJ		ECS95Z6EAK ECS95Z6BAJ ECS95Z6CAK ECS95Z6DAJ		ECS95Z8EAK ECS95Z8BAJ ECS95Z8CAK ECS95Z8DAJ		S811T24N3S
304A	200V 230V 460V 575V	100 100 250 300	24V DC	400A 400A 400A 400A	ECS9511EAK ECS9511BAK ECS9511CAK ECS9511DAK		ECS9512EAK ECS9512BAK ECS9512CAK ECS9512DAK		ECS9514EAK ECS9514BAK ECS9514CAK ECS9514DAK		ECS9516EAK ECS9516BAK ECS9516CAK ECS9516DAK		ECS9518EAK ECS9518BAK ECS9518CAK ECS9518DAK		S811T30N3S

① Digital Interface Module (DIM) is mounted on door as standard.

② Standard duty horsepower ratings are for 300% ramp current, 30 seconds ramp time, and 3 starts per hour. Consult Eaton for other ratings.

③ Based on 1.0 Service Factor. For 1.15 consult Eaton.

④ All *IT.* soft starters are furnished with 24V DC coils and control power supplies. For 24V DC separate control, use Mod Code **C35** and change the 8th digit to **Q** (i.e. ECS90S1**E**AA becomes ECS90S1**Q**AA-**C35**).

⑤ These are the Catalog Numbers for Type 4X 304-Grade Stainless Steel, as indicated by the seventh digit **4**. Example: ECS95Q**4**EAC. To order Type 4X 316-Grade Stainless Steel, change that digit to **9**. To order Type 4 Painted Steel, change that digit to **3**. To order Nonmetallic, change that digit to **5**. For details on these Alternate Enclosures, see **PG03300001E**.

Options ..... **Page 39-90**
Cover Control ..... **Page 39-92**
Dimensions ..... **Page 39-103**
Wiring Diagrams ..... **Page 39-104**
Accessories **PG03300001E**
Modifications **PG03300001E**
Technical Data **PG03300001E**
Discount Symbol **1CD1**

Table 39-125. Class ECS95 — Combination Reduced Voltage Soft-Starter — Circuit Breaker — S811 ① (Continued)

Amps	Motor Voltage	hp ②③ 1.0 S.F.	Coil Voltage ④	Circuit Breaker Type	Type 1 Catalog Number	Type 1 Price U.S. $	Type 3R Catalog Number	Type 3R Price U.S. $	Type 4X ⑤ Catalog Number	Type 4X ⑤ Price U.S. $	Type 7/9 Catalog Number	Type 7/9 Price U.S. $	Type 12 Catalog Number	Type 12 Price U.S. $	Component Soft Starter (Open) Catalog Number
Frame Size — 290 mm															
360A	200V	125	24V DC	HMCP 600A	**ECS9521EAL**		**ECS9522EAL**		**ECS9524EAL**		—		**ECS9528EAL**		**S811V36N3S**
	230V	150		HMCP 400A	**ECS9521BAK**		**ECS9522BAK**		**ECS9524BAK**		—		**ECS9528BAK**		
	460V	300		HMCP 600A	**ECS9521CAL**		**ECS9522CAL**		**ECS9524CAL**		—		**ECS9528CAL**		
	575V	350		HMCP 400A	**ECS9521DAK**		**ECS9522DAK**		**ECS9524DAK**		—		**ECS9528DAK**		
420A	200V	150	24V DC	HMCP 600A	**ECS9531EAL**		**ECS9532EAL**		**ECS9534EAL**		—		**ECS9538EAL**		**S811V42N3S**
	460V	350		HMCP 600A	**ECS9531CAL**		**ECS9532CAL**		**ECS9534CAL**		—		**ECS9538CAL**		
	575V	450		HMCP 600A	**ECS9531DAL**		**ECS9532DAL**		**ECS9534DAL**		—		**ECS9538DAL**		
500A	230V	200	24V DC	HMCP 600A	**ECS9541BAL**		**ECS9542BAL**		**ECS9544BAL**		—		**ECS9548BAL**		**S811V50N3S**
	460V	400		HMCP 600A	**ECS9541CAL**		**ECS9542CAL**		**ECS9544CAL**		—		**ECS9548CAL**		
	575V	500		HMCP 600A	**ECS9541DAL**		**ECS9542DAL**		**ECS9544DAL**		—		**ECS9548DAL**		
650A	200V	200	24V DC	HMCP 1200A	**ECS9551EAP**		**ECS9552EAP**		**ECS9554EAP**		—		**ECS9558EAP**		**S811V65N3S**
	230V	250		HMCP 1200A	**ECS9551BAP**		**ECS9552BAP**		**ECS9554BAP**		—		**ECS9558BAP**		
	460V	450		HMCP 600A	**ECS9551CAL**		**ECS9552CAL**		**ECS9554CAL**		—		**ECS9558CAL**		
	460V	500		HMCP 1200A	**ECS9551CAP**		**ECS9552CAP**		**ECS9554CAP**		—		**ECS9558CAP**		
	575V	600		HMCP 1200A	**ECS9551DAP**		**ECS9552DAP**		**ECS9554DAP**		—		**ECS9558DAP**		
720A	230V	300	24V DC	HMCP 1200A	**ECS9561BAP**		**ECS9562BAP**		**ECS9564BAP**		—		**ECS9568BAP**		**S811V72N3S**
	460V	600		HMCP 1200A	**ECS9561CAP**		**ECS9562CAP**		**ECS9564CAP**		—		**ECS9568CAP**		
	575V	700		HMCP 1200A	**ECS9561DAP**		**ECS9562DAP**		**ECS9564DAP**		—		**ECS9568DAP**		
850A	460V	700	24V DC	HMCP 1200A	**ECS9571CAP**		**ECS9572CAP**		**ECS9574CAP**		—		**ECS9578CAP**		**S811V85N3S**
	575V	800		HMCP 1200A	**ECS9571DAP**		**ECS9572DAP**		**ECS9574DAP**		—		**ECS9578DAP**		
1000A	230V	400	24V DC	RD 1600	**ECS9581BAQ**		**ECS9582BAQ**		**ECS9584BAQ**		—		**ECS9588BAQ**		**S811V10N3S**
	460V	800		RD 1600	**ECS9581CAQ**		**ECS9582CAQ**		**ECS9584CAQ**		—		**ECS9588CAQ**		
	575V	1000		RD 1600	**ECS9581DAQ**		**ECS9582DAQ**		**ECS9584DAQ**		—		**ECS9588DAQ**		

① Digital Interface Module (DIM) is mounted on door as standard.
② Standard duty horsepower ratings are for 300% ramp current, 30 seconds ramp time, and 3 starts per hour. Consult Eaton for other ratings.
③ Based on 1.0 Service Factor. For 1.15 consult Eaton.
④ All *IT.* soft starters are furnished with 24V DC coils and control power supplies. For 24V DC separate control, use Mod Code **C35** and change the 8th digit to **Q** (i.e. ECS92S1**E**AF becomes ECS92S1**Q**AF-**C35**).
⑤ These are the Catalog Numbers for Type 4X 304-Grade Stainless Steel, as indicated by the seventh digit **4**. Example: ECS95Q**4**EAC. To order Type 4X 316-Grade Stainless Steel, change that digit to **9**. To order Type 4 Painted Steel, change that digit to **3**. To order Nonmetallic, change that digit to **5**. For details on these Alternate Enclosures, see **PG03300001E**.

Dimensions

Table 39-126. Minimum Enclosure Box Numbers

Rating	SSRV	Non-combination Box No. ⑥	Combination with Fuses Box No. ⑥	Combination with HMCP Box No. ⑥
.8 – 27A	S752	6A ⑦	B1 ⑧	A1 ⑨
37A	S801/S811	7A	B1	A1 ⑨
50A	S752	6A ⑦	C	A1 ⑨
66A	S801/S811	7A	C	A1 ⑨
105A	S801/S811	7A	D	B1
135A	S801/S811	B1	D	C
180A	S801/S811	C	E	E
240A	S801/S811	G1	F1E	E
304A	S801/S811	G1	F1E	E
360A	S801/S811	G1	F1E	E
420A	S801/S811	10	F1E	E
500A	S801/S811	10	F1E	E
650A	S801/S811	10	F1E	F1E
720A	S801/S811	10	F1E	F1E
850A	S801/S811	10	F1E	F1E
1000A	S801/S811	10	F1E	F1E

⑥ Enclosure space will also accommodate for an *IT.* Power Supply, two 4-pole relays, CPT, and terminal blocks. Also includes space for a DNA module or MOV.
⑦ Same as footnote ⑥, but CPT is not included. Upsize to 7A enclosure to include space for a CPT and a full voltage bypass contactor.
⑧ Enclosure may be reduced to an A1, with all space for all items as in footnote ⑥, excluding relays and CPTs.
⑨ Same as footnote ⑥, but CPT is not included. Upsize to B1 enclosure to include space for a CPT and a full voltage bypass contactor.

Note: See **PG03300001E** for Box Dimensions for Type 1, 3R, 4X,12 and 7/9.

Options ..... **Page 39-90**
Cover Control ..... **Page 39-92**
Dimensions ..... **Page 39-103**
Wiring Diagrams ..... **Page 39-104**
Accessories **PG03300001E**
Modifications **PG03300001E**
Technical Data **PG03300001E**
Discount Symbol **1CD1**

Wiring Diagrams

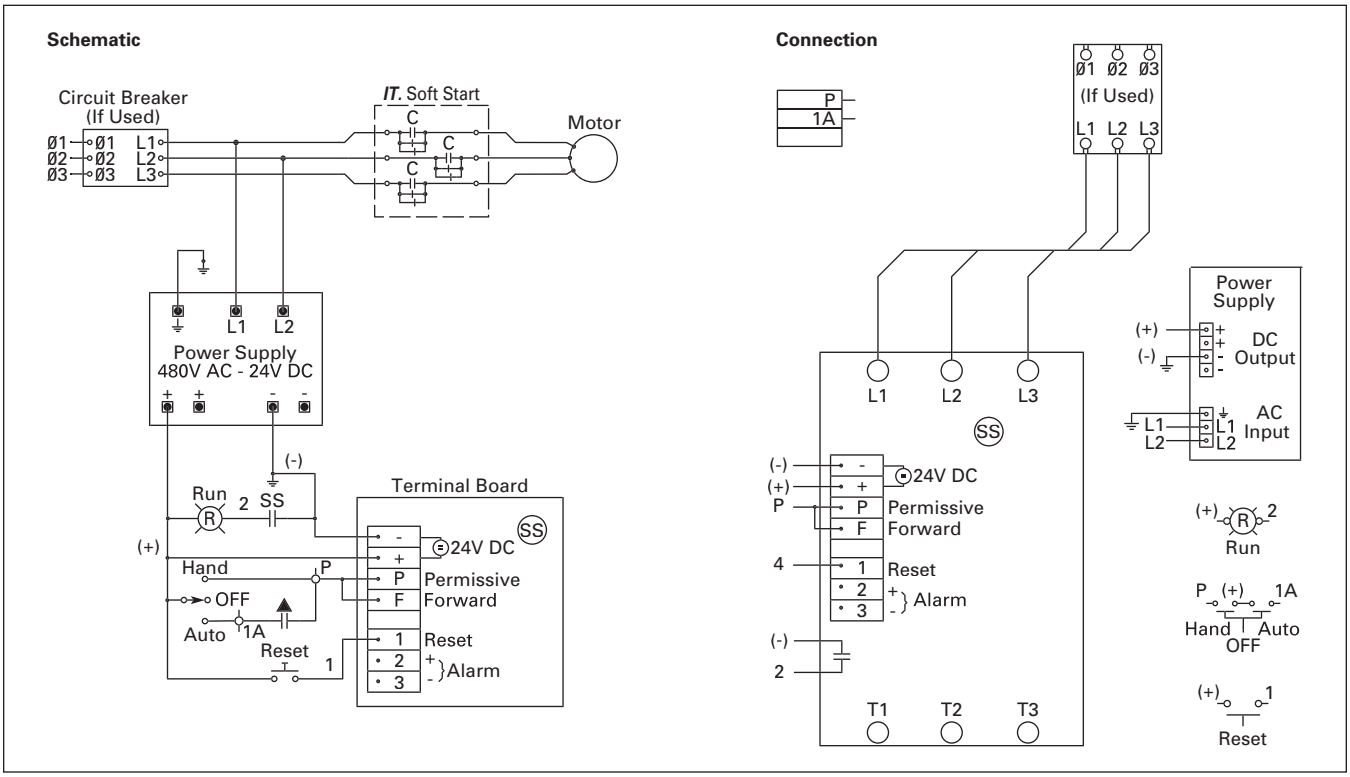

Figure 39-47. S752 Wiring Diagram

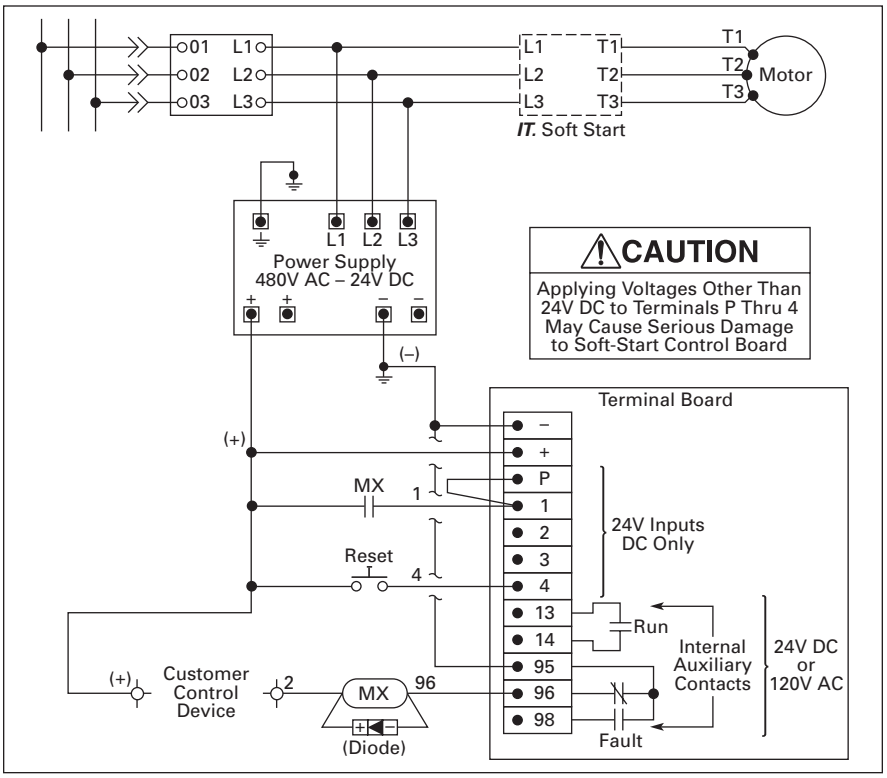

Figure 39-48. S801/S811 Wiring Diagram

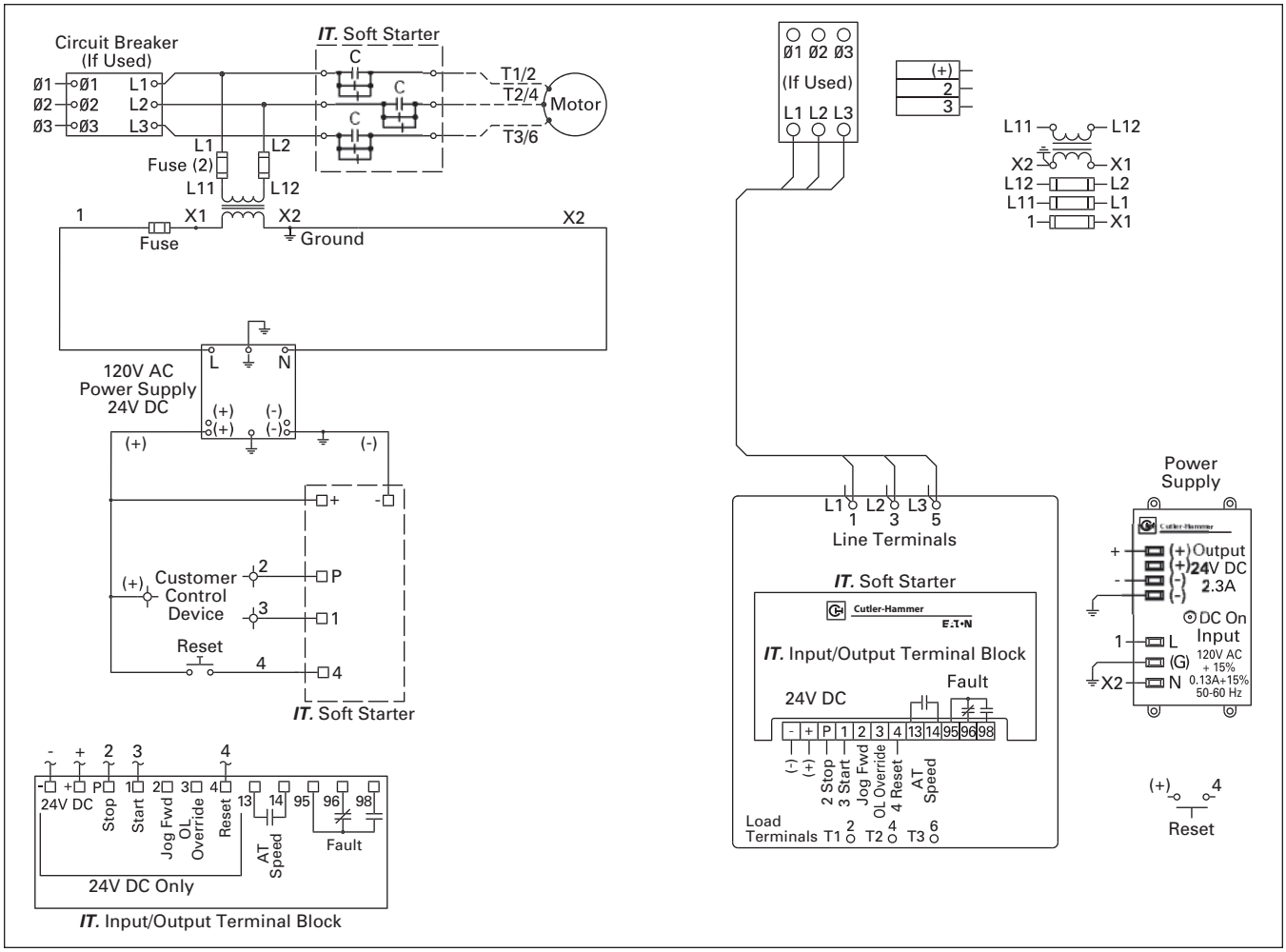

Figure 39-49. S801/S811 with CPT and Power Supply